COUNTY OF SANTA CRUZ
PLANNING DEPARTMENT
701 Ocean Street, 4th Floor
Santa Cruz, CA 95060
(831) 454-2580

NOTICE OF ADMINISTRATIVE AGRICULTURAL BUFFER SETBACK REDUCTION

Pursuant to Santa Cruz County Code 16.50.095, this notice has been provided to the project applicant, to all members of APAC, to the Agricultural Commissioner, to owners of commercial agricultural land within 500 feet of the project location, and to members of the Board of Supervisors. The identified planner may be contacted for specific information on this application.

APPLICATON NUMBER: 261116
SITUS: 209 Pioneer Road, Watsonville

Proposal to add a 90 square foot pantry addition at the rear of an existing single-family dwelling. Project requires an Agricultural Buffer Setback Reduction for new development within 200-feet (approximately 28-feet from the north property line) of a CA-zoned property.
Property is located on the north side of Pioneer Road, approximately 0.25 miles east of the intersection of Amesti Road and Pioneer Road.

APN: 109-261-07
OWNER: Kelli and Christian Lauesen
APPLICANT: Robin Alaga
SUPERVISORIAL DISTRICT: **2**

PLANNER: Evan Ditmars, (831) 831-454-3227
EMAIL: evan.ditmars@santacruzcountyca.gov

Questions or comments must be received by 5:00 p.m. 8/12/2026.

A decision will be made or, or shortly after, 8/13/2026

GENERAL NOTES

1. The code editions to be followed: Santa Cruz County Amendments

California Plumbing Code	2025 Edition	California Building Code	2025 Edition
California Electrical Code	2025 Edition	California Mechanical Code	2025 Edition
California Energy Standards	2025 Edition	California Green Building Standards Code	2025 Edition
California Residential Code	2025 Edition	California Fire Code	2025 Edition

2. Hold down devices must be secured in place prior to foundation inspection.
3. Fasteners in preservative-treated wood (anchor bolts, nails, screws, etc.) shall be of an approved silicon bronze or copper, stainless steel or hot-dipped zinc coated steel.
4. Foundation sills shall be a naturally durable wood or a preservative-treated wood.
5. Anchor bolts shall be a minimum of ½ inch diameter in SDC D and 5/8 inch minimum diameter in SDC E.
6. Anchor bolts shall be embedded a minimum of 7 inches into foundation.
7. Anchor bolts shall not be spaced more than 6 feet apart in SDC D and no more than 4 feet apart in SDC E
8. There shall be a minimum of 2 bolts per sill piece with one bolt not located more than 12 inches or not less than 4 inches of each end of the sill piece.
9. Washers for anchor bolts shall be a minimum of 3 inches by 3 inches by 0.229 inch thick. Steel plate washers may be slotted.
10. Minimum compression strength of concrete shall be 2,500 psi.
11. Reinforcing Steel to be a minimum of ASTM A615 Grade 60
12. Framing lumber shall be Douglas Fir #2 (unless noted otherwise).
13. Wall framing shall comply with CBC Table 2308.5.1
14. Nailing shall be in compliance with CBC Table 2304.10.1
15. Foundation vents to be 6"x14" @ 8'-0" o.c. max
16. Block or double joist under all walls. Blocking at 8'-0" o.c. max (not applicable with TJIs)
17. Attic and foundation venting shall be a minimum of 1/150 of the area to be vented.
18. Smoke detectors and carbon monoxide alarms in new structures shall receive their primary power from the house primary wiring and shall have a battery backup.
19. Egress requirements for sleeping rooms:
    a. Min. net clear operable dimension of 24" in height.
    b. Min. net clear operable dimension of 20" in width.
    c. Min. net clear operable dimension of 5.7 square feet
    d. Maximum distance to floor is 44"
20. Joints and other openings in the building envelope that are potential sources of air leakage shall be caulked, gasketed, weather-stripped or otherwise sealed to limit infiltration and exfiltration.
21. The first 5' of hot and cold water pipes from the storage tank from non-recirculating systems shall be thermally insulated with a minimum of 1" (.75") thick insulation for hot (cold) water pipes with a diameter of less than or equal to 2" or 1.5" (1") for hot (cold) water pipes with a diameter of greater than 2" and conform to Cal Energy Code 150.0(j)2
22. The builder/contractor shall provide the owner and County Building Department a copy of the CF-2R Installation Certificate at the time of inspection.
23. Air ducts installed under a floor in a crawl space shall be installed as to maintain a vertical clearance of 18" for all portions of the duct that would obstruct access to any part of the crawl space.
24. Shower compartments and walls above bathtubs with installed shower heads shall be finished with a smooth, non-absorbent surface to a height of not less than 72" above finish floor. Ceramic tile is to be installed over fiber-cement or cementitious backer board.
25. The maximum hot water temperature discharging from the bathtub, shower and whirlpool bathtub filler shall be limited to 120 degrees Fahrenheit. The water heater thermostat shall not be considered a control for the meeting of this provision.
26. Plumbing fixtures are required to meet the following maximum flow rates; shower heads 1.8 gpm @ 80 psi, kitchen faucet 1.8 gpm @ 60 psi, lavy faucets 1.2 gpm @ 60 psi and water closets 1.28 gallons per flush.
27. The shower valve shall be a pressure balance type, thermostatic mixing type or a combination pressure balance/thermostatic mixing type.
28. Fiber-cement, fiber-mat reinforced cementitious backer units, glass mat gypsum backers of fiber-reinforced gypsum backers in compliance with ASTM C 1288, C 1325, C 1178 or C 1278 respectively and installed in accordance with manufacturer's recommendations shall be used as backers for wall tile in tub and shower areas and wall panels in shower areas [CRC R702.4.2]
29. Ceramic tile surfaces shall be installed in accordance with ANSI A108.1, A108.4 through A108.6, A108.11, A118.1, A118.3, A136.1, and A137.1. [CRC R702.4.1]
30. The waste outlet and tailpiece for the shower shall be a minimum 2" in diameter.

FIRE DEPARTMENT NOTES – (SPRINKLED)

1. These plans are in compliance with the 2025 California Fire and Building Codes and with applicable National Fire Protection Association Standard 13D and Monterey County Fire Protection Association and district amendments.
2. This building is R-3, Type V-B, and Sprinkled.
3. A public fire hydrant is within 600 feet of any portion of the building meeting the minimum required fire flow
4. The required available fire flow on this property is 1,000 gallons per minute for 120 minutes.
5. Before construction begins, temporary or permanent address numbers shall be posted. Permanent numbers must be posted prior to final inspection. Address numbers shall be posted on property so as to be clearly visible from the road. Address numbers must be in "Arabic" (1,2,3, etc.), not "Roman" (I,II,V,etc.) or written out in words. Address numbers shall be a minimum of 6" tall, with wide stroke, and posted on a contrasting background, and visible from the street. Where numbers are not visible from the street, additional numbers shall be installed on a directional sign at the property driveway and the street.
6. Roof construction shall be Class A (min.) as defined by Uniform Building Code Standard 15-2.
7. There shall be a minimum of a 30 foot clearance maintained with non-combustible vegetation around all structures. Exception: Single specimens of trees, ornamental shrubbery, or similar plants used as ground covers, provided they do not form a means of rapidly transmitting fire from native growth to any structure.
8. Electric gates shall be provided with a keyed switch meeting fire department specifications. Gate entrances shall be at least the width of traffic lane, but in no case less than 12 feet in width. Gates must be 2 feet wider than required road width. Unobstructed vertical clearance shall not be less than 15 feet.
9. The installation of an approved spark arrestor shall be placed on top of the chimney. Wire mesh not to exceed ½ inch. (When adding a new fireplace or wood stove),
10. All requirements of the Single Family Dwelling Guide must be met.
11. Smoke detectors are required in all sleeping rooms and in hallways outside of sleeping rooms within 10 feet of sleeping room doors.
12. Carbon Monoxide Alarms (CMA) are required outside all sleeping rooms within 10 feet of sleeping room doors.
13. All buildings shall be equipped with an automatic sprinkler system complying with the latest edition of NFPA 13D currently adopted standards of the Santa Cruz County Fire Chief's Association.
14. Fire alarm flow switch shall be wired to kitchen refrigerator circuit. Any deviations require fire dep't. approval.
15. A 48 hour minimum notice to the fire department is required prior to any inspection and/or test.
16. The sprinkler installer shall submit three (2) sets of plans and calculations for the automatic sprinkler system to the fire agency for approval.
17. The copies of the building and fire system plans and permits must be on site during construction.
18. All underground piping systems shall comply with the County Standard FPO-005 and shall require plan submittal and permit approval prior to installation.
19. An UNDERGROUND FIRE PROTECTION SYSTEM WORKING DRAWING must be prepared by the designer/installer. The plans shall comply with the UNDERGROUND FIRE PROTECTION SYSTEM INSTALLATION POLICY HANDOUT. Underground plan submittal and permit will be issued to a Class C-16, owner-builder of an owner-builder occupied SFD, or a C-36 plumbing contractor.
20. The driveway/access road shall be in place prior to any framing construction, or construction will be stopped.
21. Driveway must be a minimum of 12 feet wide with a vertical clearance of 13'-6"

OWNER:

Chris & Kelli Lauesen
290 Pioneer Road
Watsonville, CA 95076

PROJECT DATA:

A.P.N.	109-261-07
Zoning	RA
Occupancy Group	R-3
Construction Type	VB Non-Sprinkled
Parcel Size	31,712 sq. ft. (Assessor)
Lot Coverage	2,442 sq. ft. 7.7%
Existing Residence	1,584 sq. ft. (Assessor)
Proposed Addition	*90 sq. ft.*
Total Heated Area	1,674 sq. ft.
Area of Remodel	*870 sq. ft.*
Existing Garage	768 sq. ft.

SCOPE OF WORK:

Construct a 90 sq. ft. addition to add a pantry and relocate the laundry room. Remodel to include: kitchen, add a bath in the old laundry area, and add a trussed roof over the living, family, dining and kitchen areas (870 sq. ft.)

SHEET INDEX:

Sheet 1: Vicinity Map, Site Plan,
Sheet 2: Existing & Proposed Floor Plans, Electrical Plan & Notes
Sheet 3: Foundation Plan, Roof Framing Plans & Details
Sheet 4: Sections & Details
Sheet 5: Elevations
Sheet D.1: Engineering Notes & Details
Sheet D.2: Engineering Details & Shear Wall Schedule
Sheet EN.1: Title 24 Energy Documents — W2WH.1 STRONG WALL DETAILS
Sheet ENN: Title 24 Energy Documents — W2WH.2 STRONG WALL DETAILS
Sheet GB.1: Green Building Notes

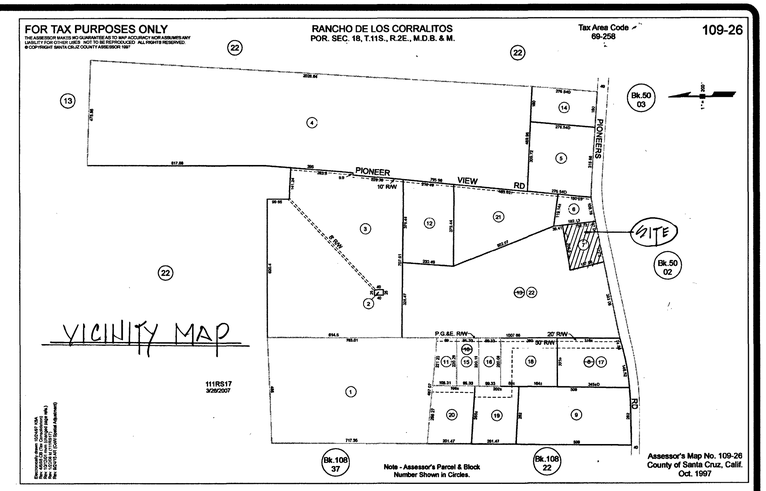

VICINITY MAP

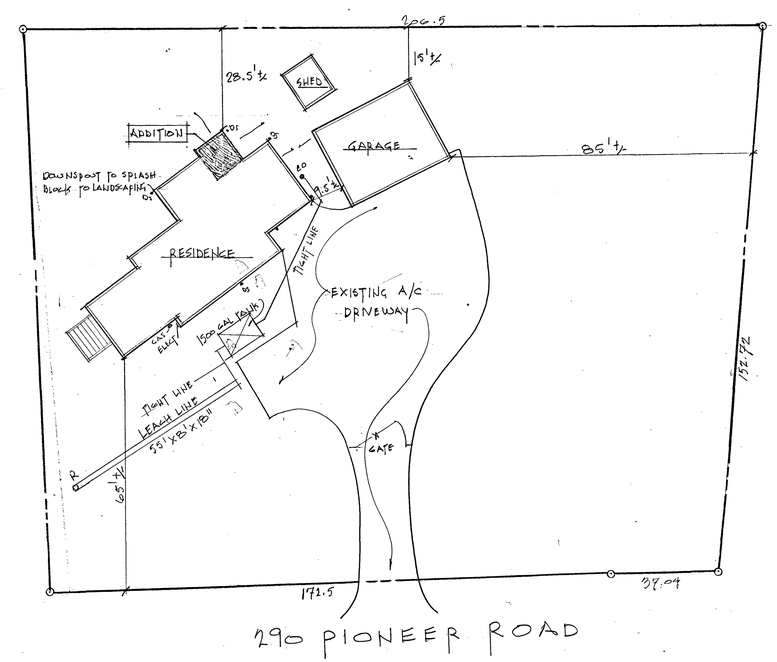

290 PIONEER ROAD

SITE PLAN Not A Survey
SCALE: 1" = 20'

REVISIONS	BY

ROBIN ALAGA
250 Evening Hill Lane Corralitos, CA 95076
Phone: (831)724-4994 Cell: (831)419-4919
e-mail: alagains@gmail.com

LAUESEN ADDITION & REMODEL
Chris & Kelli Lauesen 831.588.8230 lauesenc@gmail.com
290 Pioneer Road Watsonville, CA 95076
A.P.N. 109-261-07

Robin Alaga

DRAWN	ROBIN
CHECKED	
DATE	15 · Nov · 25
SCALE	NOTED
JOB NO.	24.47 A
SHEET	
OF	SHEETS

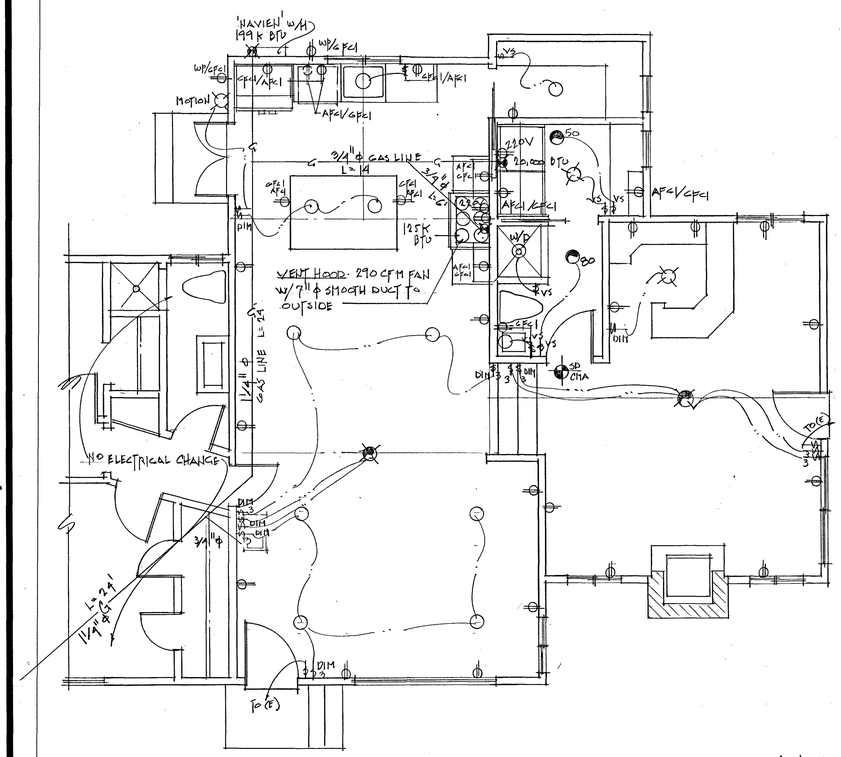

ELECTRICAL PLAN

SCALE: 1/4"=1'-0"

ELECTRICAL NOTES

1. Smoke alarms and carbon monoxide alarms shall receive their primary power from the house primary wiring, be interconnected and have a battery backup
2. The main electrical service panel shall be grounded Concrete encased electrode, UFER grounding. The electrode shall be located within and near the bottom of the footing consisting of at least 20 feet of one or more bare or zinc galvanized or other electrically conductive coated steel reinforcing bar at least ½ inches in diameter or consisting of at least 20 feet of bare copper conductor not smaller than a #4 wire.
3. Arc fault interrupter circuits: All 120 volt, single phase, 15- and 20- ampere branch circuits supplying outlets installed in dwelling unit kitchens, family rooms, dining rooms, living rooms, parlors, libraries, dens, bedrooms, sunrooms, recreation rooms, closets, hallways, recreation rooms or areas shall be protected by a listed Arc-Fault Circuit Interrupter, combination-type, (AFCI), installed to provide protection of the branch circuit.
4. All 125 volt, 15 and 20 ampere receptacle outlets shall be tamper resistant receptacles.
5. Fixtures installed over a bathtub or shower shall be installed so that water cannot enter or accumulate in the wiring compartment or other electrical parts. All luminaries subject to shower spray shall be listed for use in wet locations
6. All recessed lighting fixtures shall be IC & AT rated and installed per manufacturers listing and installation instructions. All luminaries subject to shower spray shall be listed for use in wet locations. Thermal insulation shall not be installed above or within 3 inches of a recessed fixture unless it is identified as a Type IC fixture.
7. One 30-amp electrical circuit shall be provided in the laundry area. This circuit shall have no other outlets.
8. Bathroom electrical outlets shall be supplied by at least one 20-amphere branch circuit. The circuit shall have no other electrical outlets. Other equipment (lighting, exhaust fans). Within the same bathroom, may be supplied by the same branch circuit, where the branch circuit supplies a single bathroom only.
9. In dwelling units, at least one GFCI protected wall receptacle outlet shall be installed in bathroom, within 36" of the outside edge of each basin. Outlets shall be located on the wall, or partition adjacent to the basin.
10. Clothes dryers & electrical ranges shall have a 4-wire grounded electrical outlet.
11. Bathroom fans shall be Energy Star rated and, unless functioning as a component of a whole house ventilation system, shall be controlled by a humidity control. Bathroom fan exhaust ducts shall terminate outside the building and be equipped with backdraft dampers.
12. All lighting to be high efficacy.
13. Vacancy sensors required in garages, bathrooms, laundry/mud rooms, and shops- min. one per room.
14. An approved, readily accessible, and independent means of disconnect for the electrical supply to each piece of equipment shall be provided in sight of the equipment served.
15. Branch circuits supplying receptacle outlets inside the garage shall not supply outlets on the exterior of the garage.
16. Luminaires recessed into ceilings shall meet the following requirements:
    b) For luminaires with hard wired ballasts or drivers, allow ballast or driver maintenance and replacement to be readily accessible to building occupants from below the ceiling without requiring the cutting of holes in the ceiling; and
    b) Shall not contain screw base sockets; and
    c) Shall contain light sources that comply with References Joint Appendix JA8, including the elevated temperature requirements, and that are marked "JA8-2019-E" as specified in Reference Joint Appendix JA8.
17. Outdoor lighting fixtures shall be listed for damp or wet installation, as applies to the location of installation and degree of weather protection afforded by adjacent permanent construction.
18. Outdoor lighting fixtures shall be high efficacy type and shall be controlled by a manual on-off switch that does not override to ON on the automatic actions of a motion sensor, photo-control, astronomical time clock device or ECMS, unless the override automatically reactivates to normal operation within 6 hours, or the device is automatically programmed to turn the light OFF during daylight hours.
19. JA8 marking is required for the following:
    - All light sources in ceiling recessed downlight luminaries. Note that ceiling recessed downlight luminaries shall not have screw bases regardless of lamp type as describe in Section 150.0(k)1.C
    - Any light source not otherwise listed above, and certified to the Commission as complying with Joint Appendix 8.
20. Fixtures recessed into ceilings shall be listed for zero clearance insulation contact (IC), have a label that certifies that the fixture is airtight with air leakage less than 2.0 CFM at 75 Pascal's (AT), be sealed with a gasket or caulk to the ceiling, have accessible ballasts/drivers if hardwired, and not contain a screw based sockets. They shall contain light sources that comply with References Joint Appendix JA8, including the elevated temperature requirements, and that are marked "JA8-2019-E".
21. In other than closets less than 70 square feet and hallways, dimmers or vacancy sensors shall control all luminaries required to have light sources compliant with Reference Joint Appendix JA8.

ELECTRICAL LEGEND

- GAS
- Duplex Outlet
- 4-Plex Outlet
- 220v Outlet
- Light Switch
- VS Light Switch with Vacancy Sensor
- 3 3-Way Light Switch
- DIM Light Switch w/ Dimmer
- 50 50 CFM Fan
- 80 80 CFM Fan with Humidistat Sensor
- Ceiling Mounted High Efficacy Light
- Recessed High Efficacy Light
- Under Cabinet High Efficacy Light
- Flood- High Efficacy Light
- 2' x 4' Ceiling Mounted High Efficacy Light
- G Gas Line
- 110v Smoke Detector Interconnected with all Detectors w/ battery backup
- BATT Battery Operated Smoke Detector
- CMA Carbon Monoxide Alarm

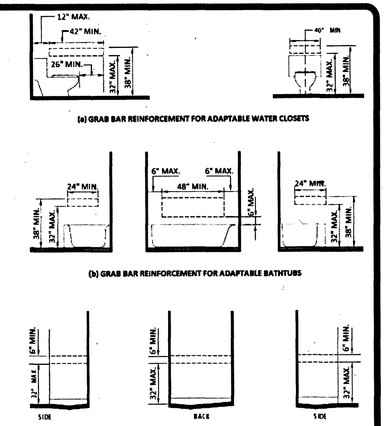

LEGEND

- PROPOSED WALL
- EXISTING WALL
- WALL TO BE REMOVED
- (N) NEW
- (E) EXISTING
- (V.I.F.) VERIFY IN FIELD

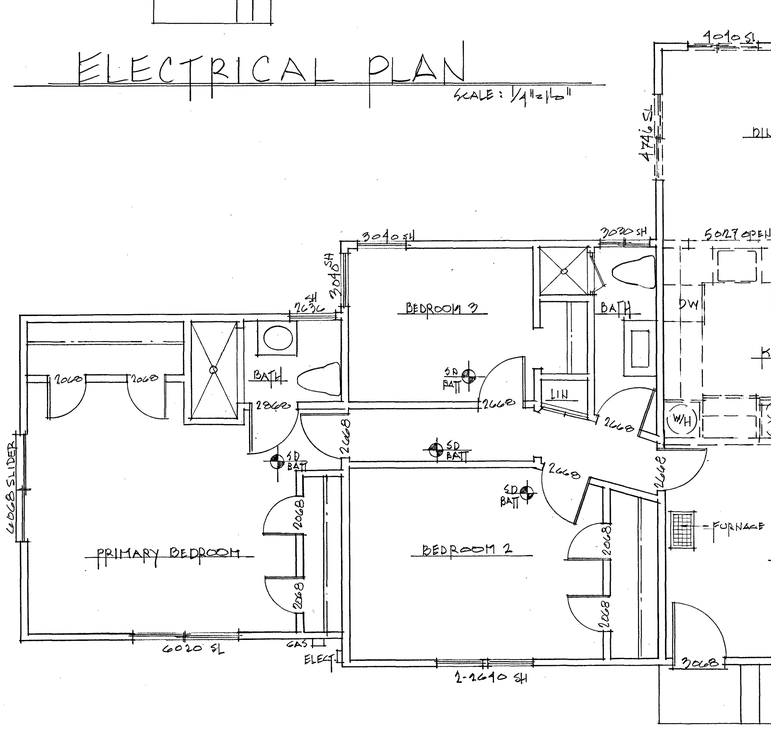

EXISTING/DEMO PLAN

SCALE: 1/4"=1'-0"

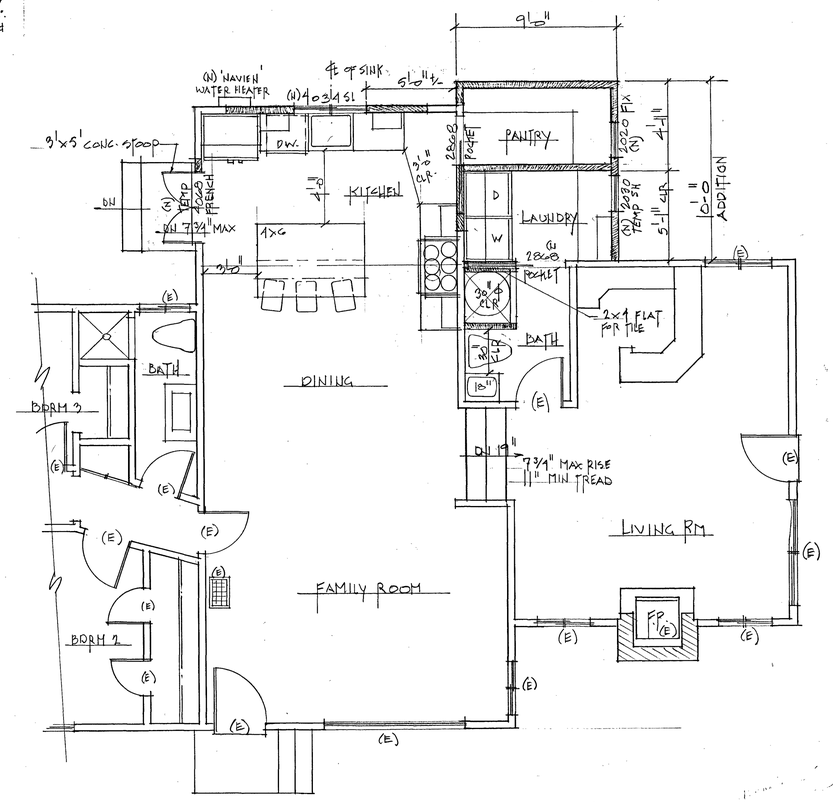

PROPOSED PLAN

SCALE: 1/4"=1'-0"

REVISIONS	BY

ROBIN ALAGA
2250 Evening Hill Lane Corralitos, CA 95076
Phone: (831)724-4994 Cell: (831)419-4919
e-mail: alagainc@gmail.com

LAUESEN ADDITION & REMODEL

Chris & Kelli Lauesen 831.588.8230 lauesenc@gmail.com
290 Pioneer Road Watsonville, CA 95076

A.P.N. 109-261-07

Robin Alaga

DRAWN	ROBIN
CHECKED	
DATE	20 JAN 2020
SCALE	1/4"=1'-0"
JOB NO.	21-47 A
SHEET	2 OF SHEETS

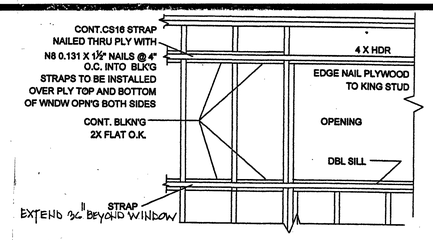

SHEAR FORCE TRANSFER
@ WINDOW OPN'G CS16 CONT. (E/3)

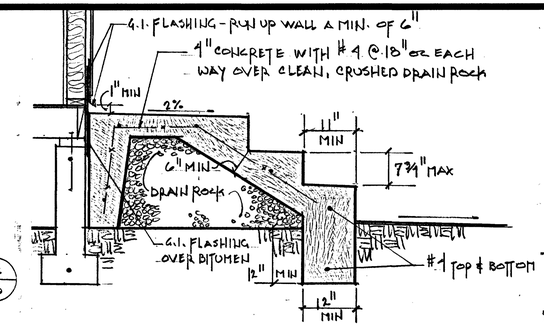

(D/3) PORCH DETAIL
SCALE: 3/4" = 1'-0"

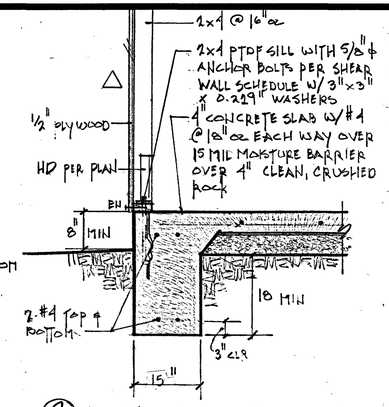

(G/3) EXTERIOR FOOTING
SCALE: 3/4" = 1'-0"

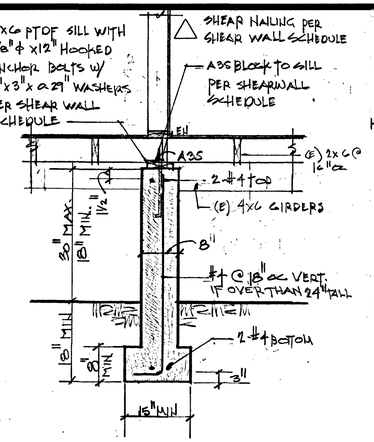

(B/3) INTERIOR FOOTING
SCALE: 3/4" = 1'-0"

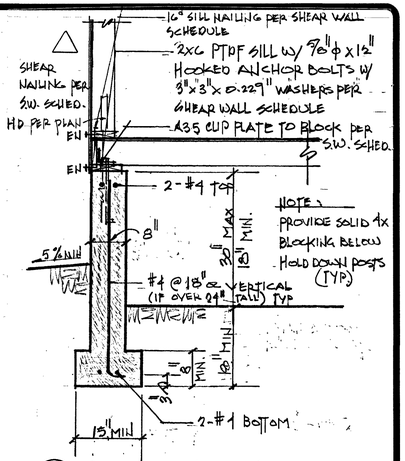

(A/3) PERIMETER FOOTING
SCALE: 3/4" = 1'-0"

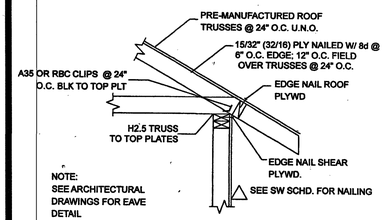

TYP ROOF SHEAR TRANSFER
ROOF TRUSS TO TOP PLATE (F/3)

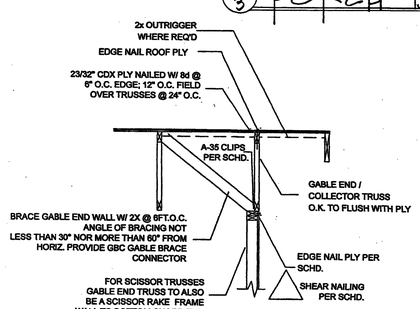

ROOF SHEAR TRANSFER
AT GABLE END WALL (G/3)

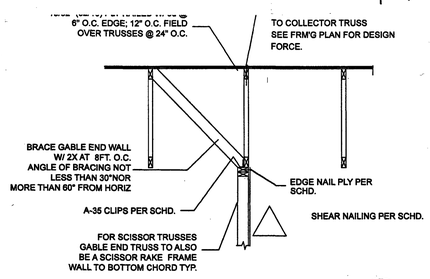

ROOF SHEAR TRANSFER
ROOF TRUSS PARALLEL TO WALL (H/3)

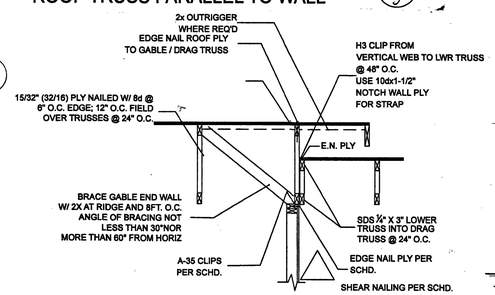

ROOF SHEAR TRANSFER
@ LOWER ROOF CONNECTION (I/3)

NOTE

1. DTT2Z to ½" diameter FIS54 GR 36 all thread – Epoxy with Simpson 'Set G-3' – drill 5/8" Diameter hole min. Embedment of 10" min. End distance 5" min. Edge distance 1-3/4" Min. Follow installation instructions per Manufacturer. Continuous Special Inspection Required for epoxy installation.

2. HDUE3 TO PAB5
Retrofit hold down bolts require "Simpson PAB" bolts to achieve required uplift capacity. PAB bolts must be embedded into new concrete footings below existing foundation. This requires a continuous hole to be drilled through the existing stem wall and footing to allow new bolt to extend into new concrete

If the double nut / washer is welded to the bolt, A307 all thread may be substituted for standard strength, A449 for high strength.

For HDUE3 & HDUE5 use PAB5 5/8" diameter with 24"sq. x 12" deep footing with 3- #4 each way.

For HDU8, HDQ8 use PAB7 7/8" diameter with 30"sq. x 15" deep footing with 5-#4 each way

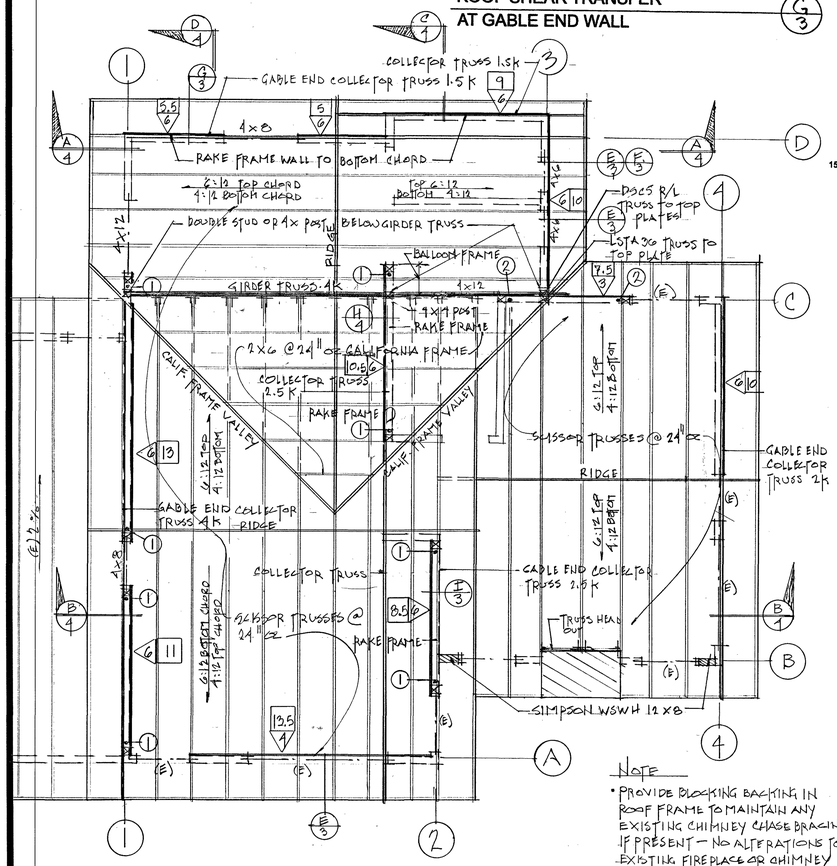

NOTE
- PROVIDE BLOCKING BACKING IN ROOF FRAME TO MAINTAIN ANY EXISTING CHIMNEY CHASE BRACING IF PRESENT – NO ALTERATIONS TO EXISTING FIREPLACE OR CHIMNEY
- EXTEND GAS INSERT FLUE TO MEET MANUFACTURERS CLEARANCE REQ'TS

ROOF FRAMING PLAN
SCALE: 1/4" = 1'-0"

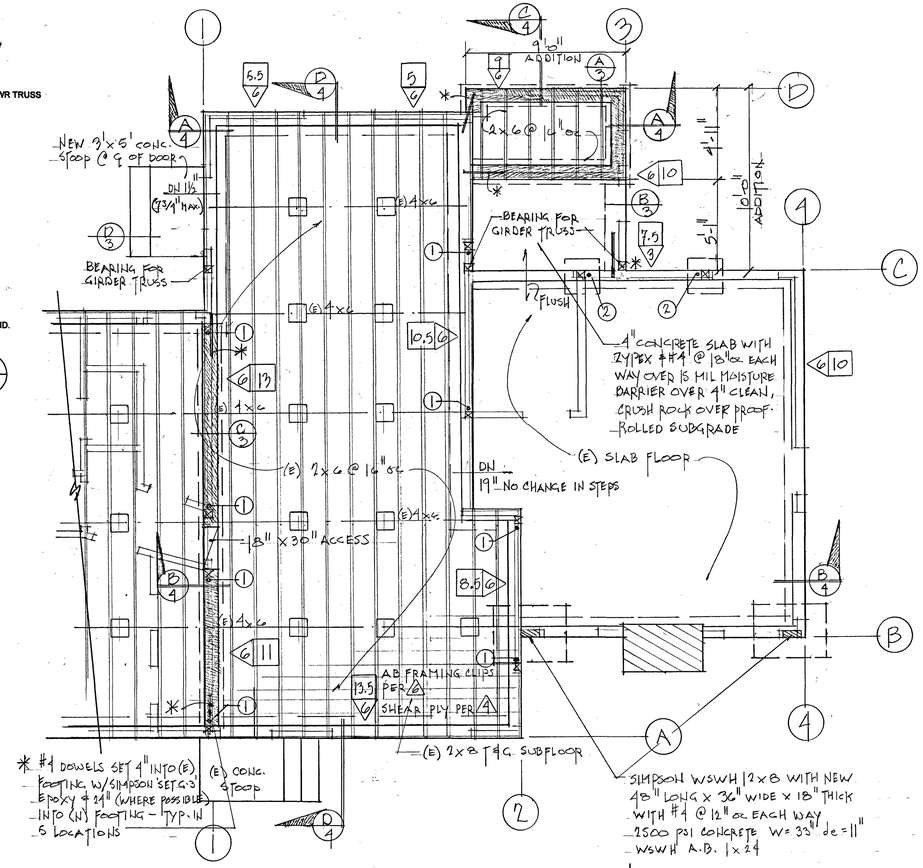

FOUNDATION PLAN
SCALE: 1/4" = 1'-0"

REVISIONS	BY

ROBIN ALAGA
250 Evening Hill Lane Corralitos, CA 95076
Phone: (831)724-4994 Cell: (831)419-4919
e-mail: alagainc@gmail.com

REGISTERED PROFESSIONAL ENGINEER ROBIN M. D. ALAGA No. 62913 Exp. 6/26 CIVIL STATE OF CALIFORNIA

LAUESEN ADDITION & REMODEL

Chris & Kelli Lauesen 831.588.8230 lauesenc@gmail.com
290 Pioneer Road Watsonville, CA 95076

A.P.N. 109-261-07

Robin Alaga

DRAWN	ROBIN
CHECKED	
DATE	20. JAN. 2026
SCALE	NOTED
JOB NO.	24-47
SHEET	3
OF	SHEETS

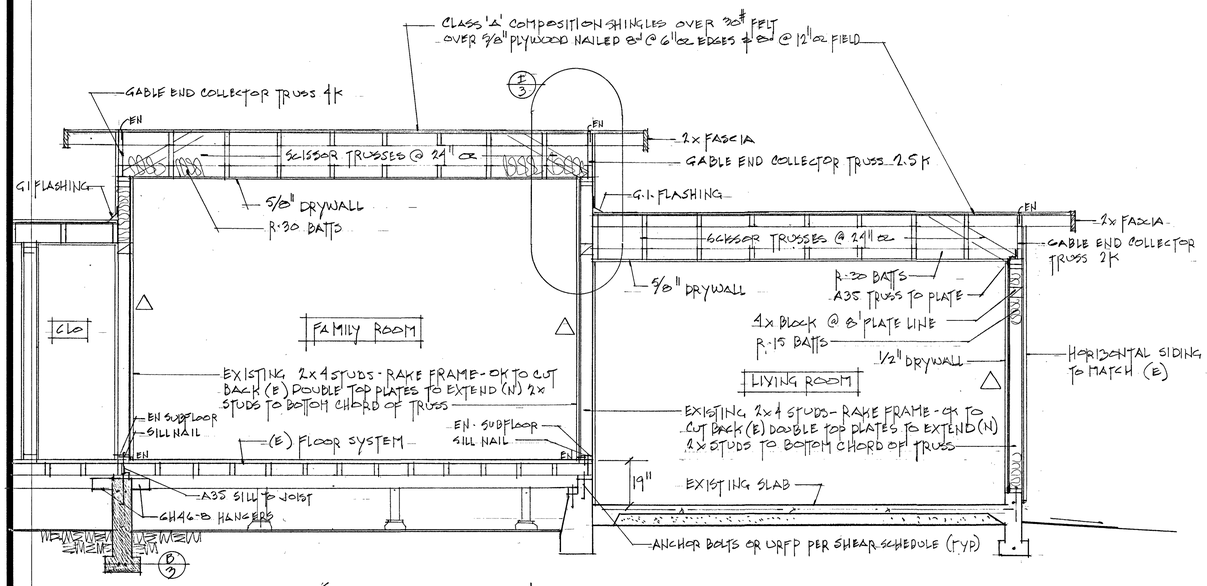

SECTION B-B

SCALE: 3/8" = 1'-0"

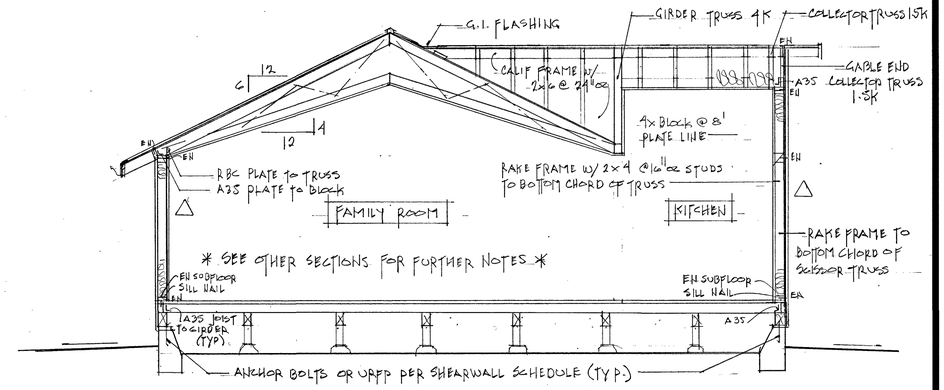

SECTION D-D

SCALE: 1/4" = 1'-0"

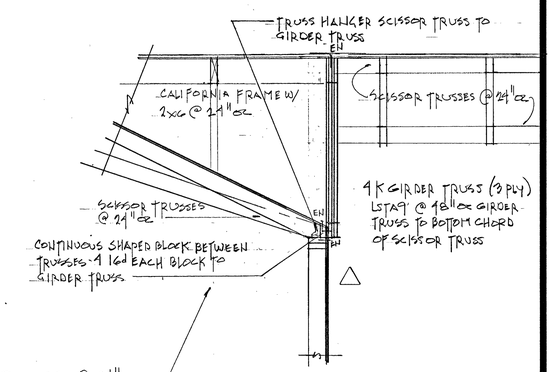

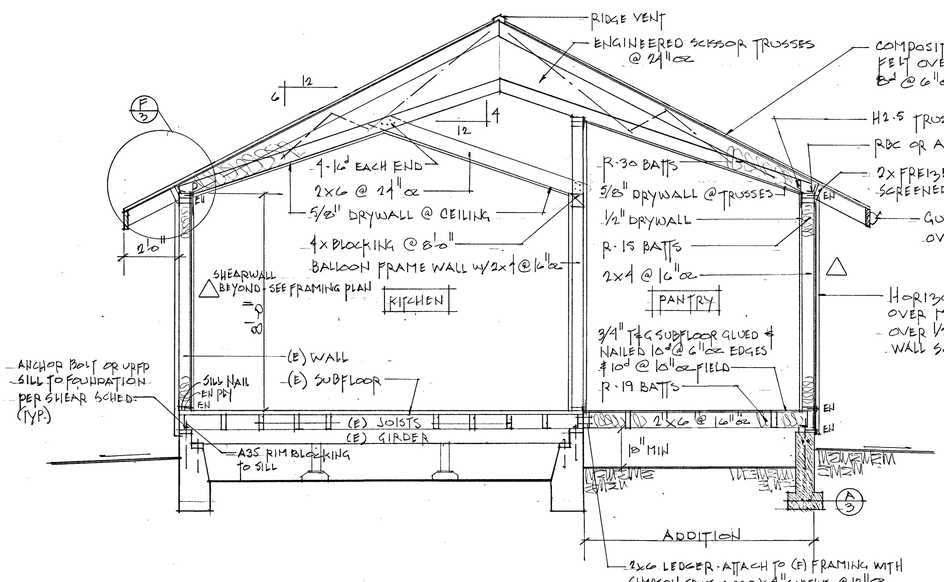

SECTION A-A

SCALE: 3/8" = 1'-0"

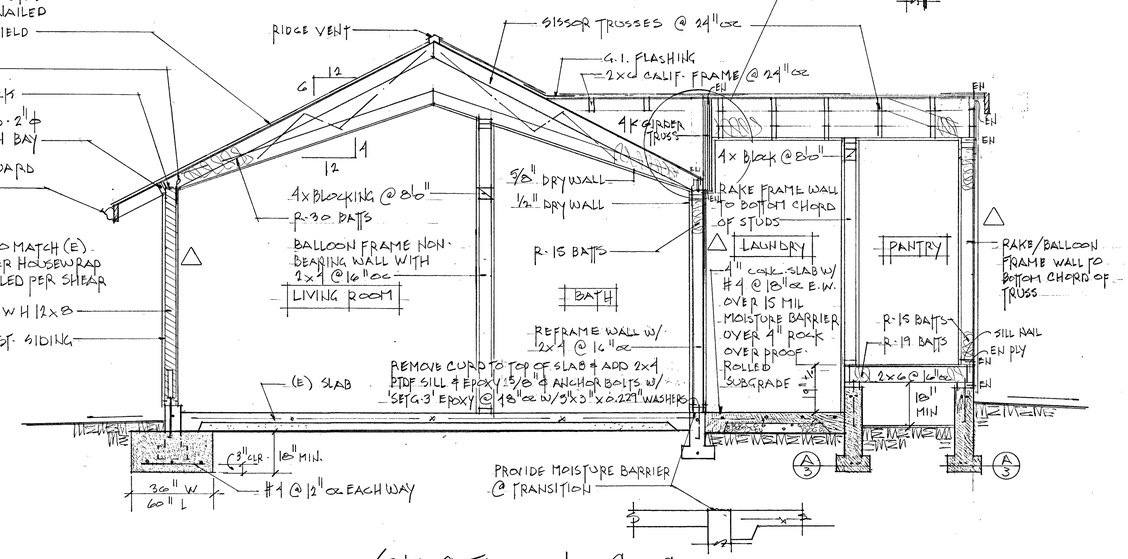

SECTION C-C

SCALE: 3/8" = 1'-0"

REVISIONS	BY

ROBIN ALAGA
250 Evening Hill Lane Corralitos, CA 95076
Phone: (831)724-4994 Cell: (831)419-4919
e-mail: alagainc@gmail.com

REGISTERED PROFESSIONAL ENGINEER
TOM D. WANN
No. 62913
Exp. 6/26
CIVIL
STATE OF CALIFORNIA

LAUESEN ADDITION & REMODEL

Chris & Kelli Lauesen
831.588.8250 lauesenc@gmail.com
290 Pioneer Road Watsonville, CA 95076

A.P.N. 109-261-07

Robin Alaga

DRAWN	ROBIN
CHECKED	
DATE	20-JANUARY-20
SCALE	NOTED
JOB NO.	24-47
SHEET	
OF	SHEETS

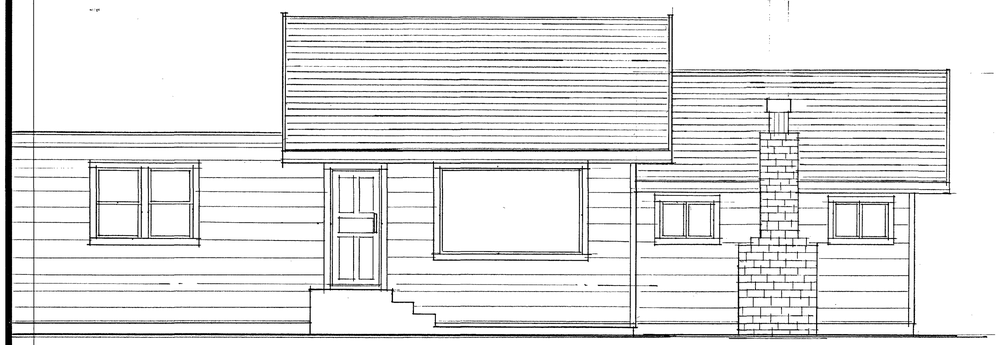

SOUTH ELEVATION

SCALE: 1/4" = 1'-0"

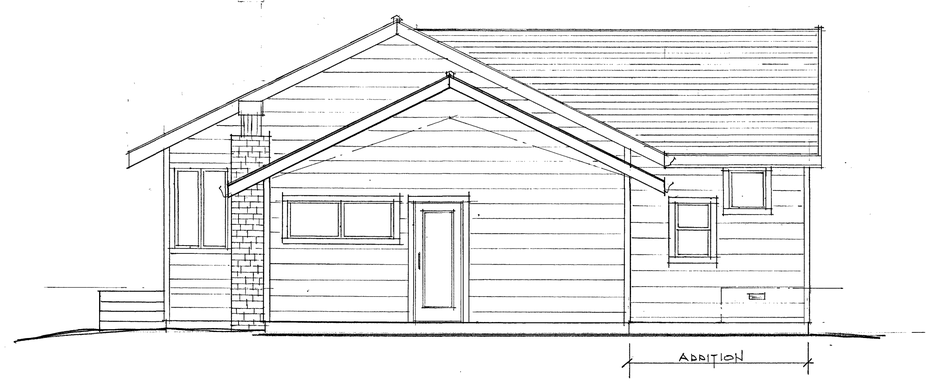

EAST ELEVATION

SCALE: 1/4" = 1'-0"

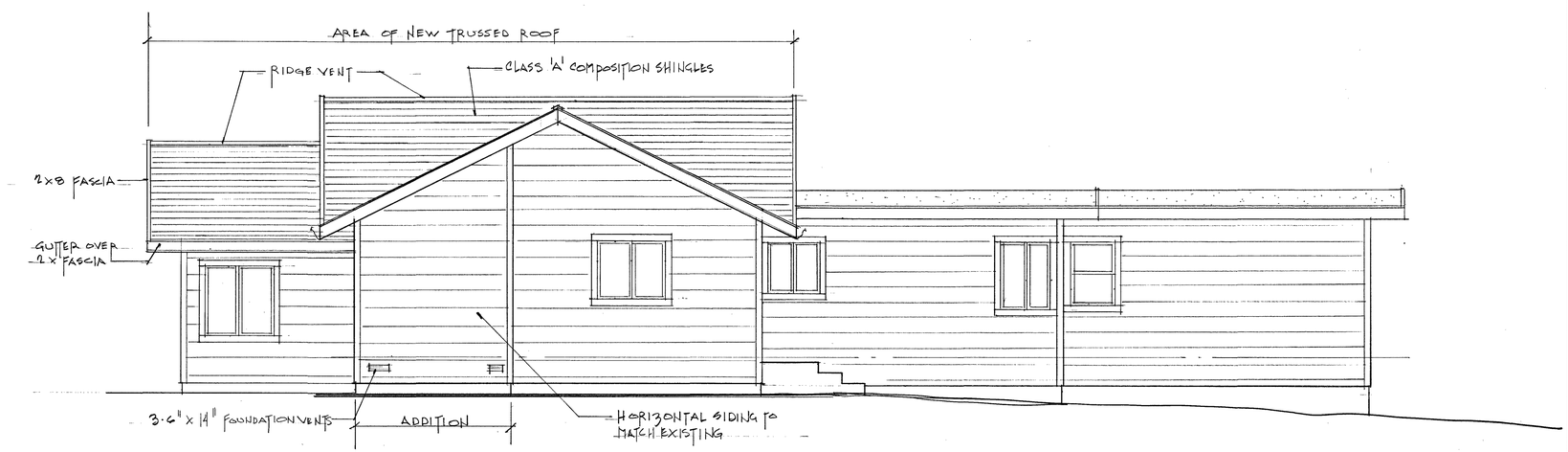

NORTH ELEVATION

SCALE: 1/4" = 1'-0"

REVISIONS	BY

ROBIN ALAGA
250 Evening Hill Lane Corralitos, CA 95076
Phone: (831)724-4994 Cell: (831)419-4919
e-mail: alagainc@gmail.com

LAUESEN ADDITION & REMODEL

Chris & Kelli Lauesen 831.588.8230 lauesenc@gmail.com
290 Pioneer Road Watsonville, CA 95076

A.P.N. 109-261-07

Robin Alaga

DRAWN	ROBIN
CHECKED	
DATE	20 · JANUARY · 26
SCALE	1/4" = 1'-0"
JOB NO.	21 · 47
SHEET	5
OF	SHEETS

GENERAL

All construction shall met the requirements of the C.B.C. 2022 Edition and any amendments by the governing Building Department.

Conditions not specifically detailed shall be built to conform with similar construction noted in the working drawings.

The contractor shall verify all dimensions, elevations, materials and conditions prior to starting construction. Any discrepancies shall be reported to the architect prior to ordering materials and starting construction.

If a geotechnical report is available for the project, the geotech engineer shall observe and certify the foundation excavations prior to placement of reinforcing.

Prior to fabrication, the contractor shall submit to the architect for approval, shop drawings for all structural steel, reinforcing steel, glulam beams and prefabricated trusses.

No verbal change orders shall become legal or binding until approved in writing.

Contractor shall not store construction materials or operate construction equipment in such a manner so that the design live loads of the structure are exceeded. No construction materials shall be stored on overhanging framing.

Contractor shall be solely responsible for all bracing or shoring required during construction until all framing is complete.

All connectors used on pressure treated wood to be verified for compatability of connector with chemical used to treat lumber.

Special Inspection as required by section 1705

CONCRETE:

All concrete used in this work shall be regular weight concrete (150 P.C.F.) U.O.N.

Concrete shall develop a minimum compressive strength at an age of 28 days as follows:

FOOTINGS & WALLS 2500 psi

SLAB ON GRADE 2500 psi

CAISSONS 2500 psi

Concrete shall have special inspection if required by Section 1705 the California Building Code.

MATERIALS

Portland Cement shall be Type II and shall conform to A.S.T.M. C-150.

Concrete aggregate shall be hardrock and conform to A.S.T.M. C-33. Maximum size of aggregate shall be 3/4 inch.

Water used in mixing concrete shall be potable and free from deleterious substances.

Option: 25% Flyash with 6 sack mix may be used as a standard mix
Admixtures shall not be added to the concrete unless approved in writing by the Engineer.

WORKMANSHIP

For materials, curing and mix design, see specifications. Mix operations shall conform to A.S.T.M. c-94. During mixing, placing and curing concrete shall be kept at a minimum temperature of 40 degrees F, and maximum temperature of 90 degrees F. Concrete shall be kept in a moist condition for minimum of five days after placement.

Placement of concrete shall be in conformance with A.C.I. Specification 301. Concrete shall not be dropped through reinforcing steel so as to cause the segregation of aggregates. Use hoppers, chutes or trunks of varying lengths so that the free unconfined fall of concrete shall not exceed five feet, using sufficient number to ensure the concrete being kept level at all times.

Debris: All debris shall be removed from forms prior to placing of concrete.

Doweling: All walls, columns, etc. shall be doweled into footings, walls, beams or slabs with bars of the same size and spacing as the wall bars with 48 bar diameter lap, except where specifically indicated otherwise.

Shoring: Contractor shall be solely responsible for design and construction, bracing, formwork, etc. Contractor shall design shoring to include any construction loads and loads from shoring above where applicable. Shoring shall not be removed until concrete has reached design strength or if shoring is needed to support shoring above.

Construction joints shall have the entire surface removed to expose clean aggregate solidly embedded. The contractor shall obtain the engineer's written approval for all construction joints not detailed on the plans.

Inserts to be cased in concrete such as reinforcing, dowels, bolts, anchors, pipes, sleeves, etc. shall be securely tied in the forms before placing the concrete to prevent their movement.

Pipes, sleeves or chases other than electrical conduits less than 1- " diameter shall not be embedded in the concrete except where specifically approved in writing by the engineer or shown on the plans. No conduit placed in a concrete slab shall have an outside diameter greater than one-third the thickness of the slab or be placed in a slab less than four inches thick. Minimum clear distance between conduits shall be six inches.

Coring shall not be permitted in any concrete unless approved in writing by the engineer.

Architectural Items: Contractor shall refer to the Architectural drawings for molds, grooves, ornaments, clips or grounds required to be cast into the concrete and for the extent of depressions, curbs, ramps, etc.

REINFORCING

All reinforcing steel shall conform to A.S.T.M. A-615 Grade 60 except for reinforcing #5 or less in size or as noted on the plans. Deformations shall be in accordance with A.S.T.M. A-305.

Splices: Reinforcing shall lapped as indicated. Per ACI 318 Latest Edition
Where laps or splices in continuous reinforcement as used in walls, grade beams, etc. are not indicated, bar shall have a lap of 48 diameters but not less than 12 inches and the splices in adjacent bars shall not be less than five feet apart. Splice bars in walls, beams, grade beams, etc. as follows: Top bars at centerline of support, bottom bars at the support. All reinforcing steel shall be securely wired and adequately supported above ground and away from the forms. Vertical reinforcing shall be secured top and bottom and at intervals not to exceed 160 bar diameters.

Bends: All reinforcing bar bends are to be made cold. Field bending of bars greater than #5 shall not be allowed. All bars are to be bent in accordance to A.C.I. and C.R.S.I. Standards.

Welding: No welding of reinforcing bars is permitted unless authorized in writing of the engineer.

Reinforcing shall be free from any dirt, concrete, grease, rust or other foreign substance that may prevent proper bonding.

All dimensions called out as clear (CLR) shall mean clear and hold.

Rebar Cover: All dimensions showing the location of reinforcing steel not noted as clear, are to center of steel. All dimensions indicated as clear shall be held at the dimension. Minimum coverage shall be as follows:

1) Where case against and permanently exposed to earth, except slab on grade 3 in.

2) Where cast in forms but exposed to earth and weather No. 6 thru No. 18 Bars 2 in.
No. 5 Bar, W31 or D31 Wire, and Smaller 1-1/2 in.

3) For slabs, walls and joists not exposed to earth and weather 3/4in.

4) For beams, columns, ties, stirrups and spirals not exposed to earth and weather 1-1/2 in.

5) For slabs on grade 3 in.

Welded wire fabric shall conform to A.S.T.M. A-185 and be of the gauge and mesh size as indicated on the plans. WWF shall be lapped one mesh at all splices, six inches minimum. Fabric shall be raised to the center of the slab with hooks as the progresses and shall be visible at the depth at the free edge of the pour.

Minimum anchor bolt diameter is ⅝ ø x 10" @ 48" o.c. with a minimum of two bolts per sill piece, within 12" of each end. Anchor bolts less than 1½" from sill edge shall be replaced with an expansion bolt.

Plate washers to be a minimum of 3"x3"x1/4" for each bolt and extend to within 1/2" of side(s) of sheathing edge nailing

Expansion anchor bolts and power driven nails shall not be installed until concrete has reached design strength.

Reinforce all foundation straps and hold down anchor bolts per Simpson Stong-Tie Installation Instructions.

SPECIAL INSPECTION (CBC 1705)

1. SPECIAL INSPECTOR: SHALL BE EMPLOYED BY THE OWNER TO PROVIDE INSPECTIONS DURING CONSTRUCTION ON THE TYPES OF WORK LISTED BELOW. THE SPECIAL INSPECTOR SHALL BE A QUALIFIED PERSON WHO SHALL DEMONSTRATE COMPETENCE FOR THE INSPECTION OF THE PARTICULAR TYPE OF CONSTRUCTION OR OPERATION REQUIRING SPECIAL INSPECTION. (CBC 1704.1)

2. REPORTS: SHALL BE PREPARED BY THE INSPECTOR AND SIGNED BY A CALIFORNIA CIVIL ENGINEER. SUBMITTED TO THE BUILDING OFFICIAL AND TO THE ENGINEER RECORD. ALL DISCREPANCIES SHALL BE BROUGHT TO THE IMMEDIATE ATTENTION OF THE CONTRACTOR FOR CORRECTION; THEN, IF NOT CORRECTED, TO THE BUILDING OFFICIAL AND THE ENGINEER OF RECORD. (CBC 1704.1.2)

3. CERTIFICATION: INSPECTOR MUST BE CERTIFIED BY THE BUILDING OFFICIAL TO PERFORM THE TYPES OF INSPECTIONS SPECIFIED.

4. SPECIAL INSPECTION IS REQUIRED OF THE ITEMS LISTED BELOW:

ITEM	INSPECTION TASK	PERIODIC OR CONTINUOUS
CONCRETE FOUNDATIONS	CONCRETE FOOTINGS ARE CONTINUOUS AND/OR INTEGRAL WITH THE SLAB, SUPPORT WALLS OF A BUILDING LESS THAN 3 STORIES IN HEIGHT, AND ARE DESIGNED BASED ON A COMPRESSIVE STRENGTH OF 2500 PSI AND THEREFORE DO NOT REQUIRE SPECIAL INSPECTION BASED ON THE EXCEPTION UNDER CBC	– PERIODIC
WOOD SHEARWALL PANEL SHEATHING WITH NAILS SPACED AT 4" O.C. OR CLOSER	PLYWOOD SHEAR WALL PANEL NAILING/SCREW ATTACHMENT, BOLTING, ANCHORING AND OTHER FASTENING INCLUDING CONNECTIONS TO WOOD DIAPHRAGMS, COLLECTORS, STRAPPING AND HOLDOWNS FOR PLYWOOD PANELS WITH BOUNDARY NAILING AT 4-INCH ON CENTER OR LESS	PERIODIC
ANCHORS POST INSTALLED IN HARDENED CONCRETE a) ADHESIVE ANCHORS	HOLD DOWN BOLTS EPOXIED IN CONCRETE (CONTINUOUS) SHEAR ANCHORS (PERIODIC)	CONTINUOUS

WATERPROOFING NOTE:

NOTE, ALL REFERENCE TO WATERPROOFING DETAILS ON THESE PLANS IS FOR GENERAL REFERENCE ONLY AND DOES NOT REPRESENT A COMPLETE WATERPROOFING SYSTEM. THE OWNER SHALL EMPLOY A WATERPROOFING CONSULTANT WHO IS FAMILIAR WITH AND EXPERIENCED WITH THIS TYPE OF WORK TO DEVELOP WATERPROOFING DETAILS AND SPECIFICATIONS. PARTICULAR CONCERN IS WATERPROOFING OF THE CONCRETE SLAB UNDER LIVING SPACES BELOW. BY SUBMISSION OF THESE PLANS FOR APPROVAL CLIENT AGREES TO INDEMNIFY TIM WANN STRUCTURAL DESIGN INC. AND ITS EMPLOYEES FROM ALL CLAIMS RESULTING FROM OR IN PART OF WATER INTRUSION INTO THE STRUCTURE.

ABBREVIATIONS

AB	Anchor Bolt	(E)	Existing	PLY	Plywood
ABV	Above	EA	Each	PSF	Pounds per Square Foot
ACI	American Concrete Institute	EN	Edge Nailing	PSI	Pounds per Square Inch
		ENGR	Engineer	PTDF	Preservative Treated Douglas Fir
ALT	Alternate	EXT	Exterior		Redwood
APA	American Plywood Association	FLR	Floor	RDWD	Reinforcement
		FND	Foundation	REINF	Required
ARCH	Architect	FOC	Face of Concrete	REQD	Roof
ATR	All Thread Rod	FOS	Face of Stud	RF	Room
BD	Board	FRMG	Framing	RM	Retaining Wall
BLK(G)	Block(ing)	FT	Foot or Feet	RTW	See Architectural Drawings
BLW	Below	FTG	Footing	SAD	Solid Blocking
BM	Beam	GALV	Galvanized	SB	Square Foot
BN	Boundary Nailing	GL	Glued Laminated	SF	Similar
BP	Base Plate	GYP	Gypsum	SIM	Specifications
BRG	Bearing	HD	Holdown	SPEC	Square
CL	Center Line	HDR	Header	SQ	Stainless Steel
CLG	Ceiling	HORIZ	Horizontal	SS	Standard
CLR	Clear, Clearance	HT	Height	STD	Steel
COL	Column	INT	Interior	STL	Skylight
CONC	Concrete	JST(S)	Joist(s)	SKYLT	Top and Bottom
CONN	Connection	MB	Machine Bolt	T&B	Tongue and Groove
CONT	Continuous	MI	Malleable Iron	T&G	Top of Concrete
CNTR	Center	MIN	Minimum	TOC	Top of Wall
DBL	Double	(N)	New	TOW	Threaded Rod
DF	Douglas Fir	OC	On Center	TR	Typical
DIA	Diameter	OH	Opposite Hand	TYP	Uniform Building Code
DTL	Detail	OPNG	Opening	UBC	Unless Noted Otherwise
DWG	Drawing	PAF	Powder Actuated Fastener	UNO	Diameter
		PL	Plate or Property Line	ø	

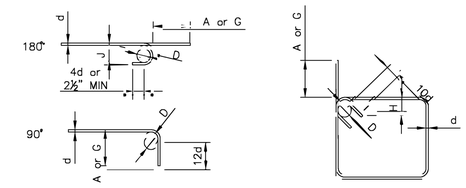

STD. HOOKS AND BENDS

STIRRUPS AND TIES

END HOOKS				
BAR SIZE	D	180 DEGREE HOOKS		90 DEGREE HOOKS
		A or G	J	A or G
#3	2½"	5"	3"	6"
#4	3"	6"	4"	8"
#5	3¾"	7"	5"	10"
#6	4½"	8"	6"	12"
#7	5¼"	10"	7"	14"
#8	6"	11"	8"	16"
#9	9"	15"	11¼"	19"

STIRRUPS AND TIES				
BAR SIZE	D	90 DEGREE HOOKS	135 DEGREE HOOKS	
		A or G	A or G	H APPROX
#3	1½"	4"	4"	2½"
#4	2"	4½"	4½"	3"
#5	2½"	6"	5½"	3¾"
SEISMIC TIES				
BAR SIZE	D	135 DEGREE HOOKS		
		A or G	H APPROX	
#3	1½"	5"	3½"	
#4	2"	6½"	4½"	
#5	2½"	8"	5½"	

NOTE:

1. DO NOT FIELD BEND REINFORCEMENT PARTIALLY EMBEDDED IN CONCRETE

HOOKS AND BENDS

Hooks & Splices

REGISTERED PROFESSIONAL ENGINEER
TIM D. WANN
No. 62913
Exp. 6/26
CIVIL
STATE OF CALIFORNIA

REVISIONS

TIM WANN STRUCTURAL DESIGN INC.
P.O. BOX 3581
FREEDOM, CA. 95018 (831) 479-1513
C.E. 62913

GENERAL NOTES, CONCRETE, & REINFORCING,

DATE:
SCALE:
DRAWN:TW
JOB NO.
SHEET D-1
OF SHEETS

TIMBER:

Materials

Grading: All lumber shall conform to the grading rules of WWPA and the following table unless otherwise noted on the plans and details. Maximum moisture content of the lumber shall be 19 percent.

ITEMS	SPECIES	SURFACE	GRADE
Joist&Rafters	D.F.	S4S	No. 2 or better U.N.O.
Beams & Posts	D.F.	S4S	No. 2 or better U.N.O.
Studs	D.F.	S4S	No. 2 or better U.N.O
Mud Sill	D.F.	S4S	Pressure Treated No. 2
Decking	Redwood		See Architectural

Use DF#1 for all beams and posts 6x and larger unless noted otherwise on plans.

Note: All lumber exposed to the weather shall be pressure treated.

Plywood: shall be Douglas Fir conforming to U.S. Product Standard PS 1 with exterior glue, grade stamped stamped A.P.A. See framing plans and manufacturers specification for additional requirements. Option: OSB Ply may be substituted.

M.
Framing Hardware shall be by Simpson Company or approved equal. All hardware exposed to the weather shall be galvanized or protected, from corrosion by an alternate approved method. All connectors used on pressure treated wood to be verified for compatability of conector with chemical used to treat lumber.

WORKMANSHIP

Wood sills shall be set on a smooth, level foundation or on a continuous bed of cement grout minimum inch thick. See foundation plan and shear wall schedule for spacing of anchor bolts. Minimum two bolts per plate.

No Structural member shall be cut or notched unless specifically shown or noted on the plans or approved in writing by the engineer. Where there is a chance of splitting, holes shall be subdrilled. All split lumber shall be replaced.

Bolt holes in wood shall be 1/16" inch oversize. Standard steel cut washers shall be used at all bearings of heads and nuts of bolts and lag screws. Bolts, nuts and washers exposed to the weather shall be galvanized. All nuts shall be tightened when placed and retightened at completion of project or immediately before finishing of construction or immediately before finishing of construction which will make them inaccessible.

Typical top plate splice: Minimum lap shall be four feet long nailed with 16d 8 inches on center staggered to avoid splitting. All cuts in plates shall occur over a stud.

Provide double joist under parallell walls U.N.O.

For shear wall nailing, anchor bolts, and shear transfer nailing, see shearwall schedule.

All roof plywood shall be a minimum ofAPA RATED 15/32" (32/16) nailed with 8d at 6" o.c. edge; 12" o.c. field. PROVIDE ⅛" SPACING GAP AT JOINTS TYP

All floor plywood shall be a minimum of APA RATED 23/32" (48/24) T&G glued and nailed with 10d at 6" o.c. edge; 10" o.c. field. U.N.O. Provide ⅛" spacing gap at joints typ.

WATERPROOFING NOTE:

1. FLASHING, WATERPROOFING AND DRAINAGE SYSTEM DETAILS & SPECIFICATIONS WHEN NOTED ON THESE PLANS ARE INTENDED TO SERVE AS A GENERAL GUIDELINE FOR THE BUILDER AND DO NOT REPRESENT THE COMPLETE OR NECESSARILY MOST EFFECTIVE SYSTEM.
2. DESIGN AND SPECIFICATIONS OF ALL FLASHING WATERPROOFING AND DRAINAGE MEDIUM SYSTEMS ARE THE RESPONSIBILITY OF THE GENERAL CONTRACTOR AND ITS SUB-CONTRACTORS.
3. THE GENERAL CONTRACTOR SHALL CONSULT WITH THE APPROPRIATE MANUFACTURERS SUPPLIERS INSTALLERS. WATERPROOFING AND WATER INTRUSION CONSULTANTS IN THE DESIGN SELECTION AND INSTALLATION OF THESE SYSTEMS SO AS TO ENSURE A WATER TIGHT ASSEMBLY AT ALL RETAINING WALLS, BALCONIES, DECKS, ROOF AREAS, AND OTHER BUILDING COMPONENTS SUSCEPTIBLE TO DAMAGE RESULTING FROM WATER AND MOISTURE INTRUSION.
4. BY SUBMISSION OF THESE PLANS FOR APPROVAL CLIENT AGREES TO INDEMNIFY TIM WANN STRUCTURAL DESIGN INC. AND ITS EMPLOYEES FROM ALL CLAIMS RESULTING FROM OR IN PART OF WATER INTRUSION INTO THE STRUCTURE.

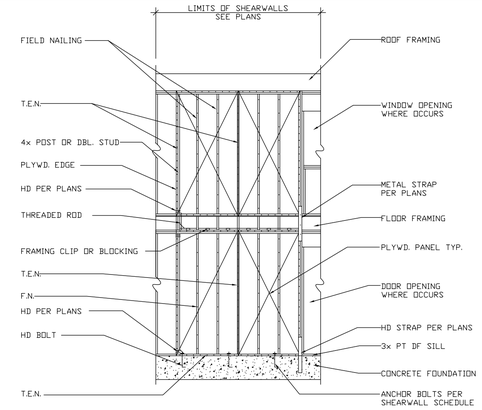

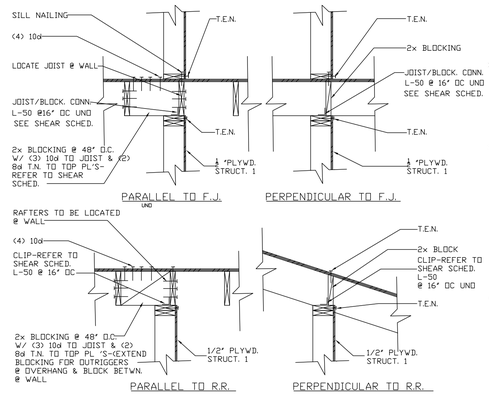

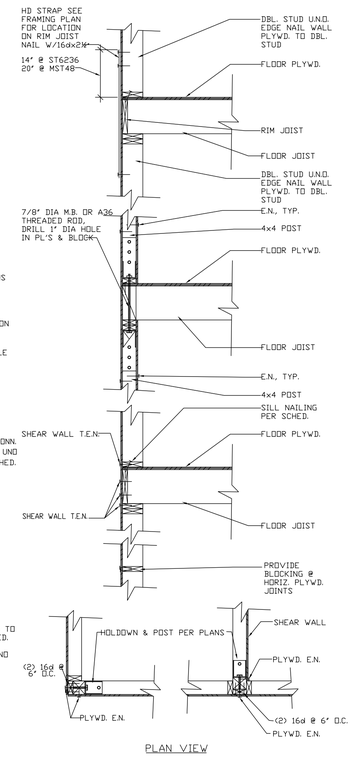

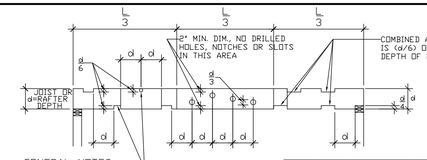

GENERAL NOTES:

1.) HOLES, NOTCHES, AND SLOTS ARE NOT TO BE LOCATED ADJACENT TO UNSOUND OR LOOSE KNOTS.

2.) PREFERED LOCATION OF NOTCH IS @ TOP OF MEMBER.

NOMINAL	ACTUAL	d/6	d/4	d/3
4"	3 1/2"	9/16"	7/8"	1 1/8"
6"	5 1/2"	7/8"	1 3/8"	1 13/16"
8"	7 1/4"	1 3/16"	13/16"	2 7/16"
10"	9 1/4"	1 1/2"	2 5/16"	3 1/16"
12"	11 1/4"	1 7/8"	2 13/16"	3 3/4"
14"	13 1/4"	2 3/16"	3 5/16"	4 7/16"

CUTTING & NOTCHING

IN EXTERIOR WALLS AND BEARING PARTITIONS ANY WOOD STUD MAY BE CUT OR NOTCHED TO A DEPTH NOT EXCEEDING 25% OF ITS WIDTH. CUTTING OR NOTCHING OF STUDS TO A DEPTH NOT GREATER THAN 40% OF THE WIDTH OF THE STUD IS PERMITTED IN NONBEARING PARTITIONS SUPPORTING NO LOADS OTHER THAN THE WEIGHT OF THE PARTITION.

BORED HOLES

A HOLE NOT GREATER IN DIAMETER THAN 40% OF THE STUD WIDTH MAY BE BORED IN ANY WOOD STUD. BORED HOLES NOT GREATER THAN 60% OF THE WIDTH OF THE STUD ARE PERMITTED IN NONBEARING PARTITIONS OR IN ANY WALL WHERE EACH BORED STUD IS DOUBLED PROVIDED NOT MORE THAN TWO SUCH SUCCESSIVE DOUBLED STUDS ARE SO BORED.

IN NO CASE SHALL THE EDGE OF THE BORED HOLE BE NEARER THAN 5/8" TO THE EDGE OF THE STUD. BORED HOLES SHALL NOT BE LOCATED AT THE SAME SECTION OF THE STUD AS A CUT OR NOTCH.

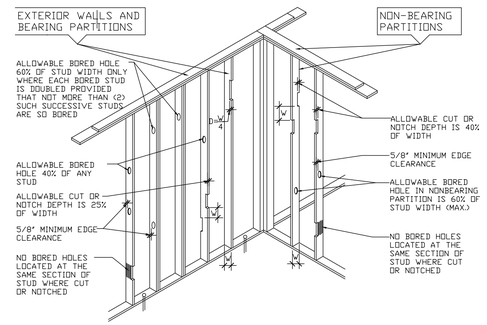

MAXIMUM HOLES & NOTCHES IN STUD WALLS

BEARING WALL	BORED HOLE	CUTTING & NOTCHING
2x4 (3 1/2")	1 13/32"	7/8"
2x6 (5 1/2")	2 7/32"	1 3/8"
2x8 (7 1/4")	2 29/32"	1 13/16"
NON-BEARING WALL	BORED HOLE	CUTTING & NOTCHING
2x4 (3 1/2")	2 3/16"	1 13/16"
2x6 (5 1/2")	3 10/32"	2 7/32"
2x8 (7 1/4")	4 11/32"	2 29/32"

PLYWOOD SHEAR WALL SCHEDULE

PLYWOOD SHEAR WALL SCHEDULE

TYPE	MATERIAL	PANEL EDGES, COLLECTORS, TIES (E.N.)	FIELD NAILING	SILL NAILING	A-35 CLIPS	ANCHOR BOLTS	MAXIMUM ALLOWABLE SHEAR (plf)
△6	15/32" CDX	8d @ 6"	8d @ 12"	16d @ 10"	24" O.C.	5/8" @ 48"	260
△4	15/32" CDX	8d @ 4"	8d @ 12"	16d @ 6"	18" O.C.	5/8" @ 36"	345
△3 *	15/32" CDX	8d @ 3"	8d @ 12"	16d @ 5"	16" O.C.	5/8" @ 24"	490
△3S *	15/32" STR 1	10d @ 3" 3"x0.148 COM.	10d @ 12"	20d @ 4"	12" O.C.	5/8" @ 16"	665
△2S *	15/32" STR 1	10d @ 2" 3"x0.148 COM.	10d @ 12"	20d @ 3"	9" O.C.	5/8" @ 14"	870

NOTES:

1. USE COMMON NAILS
2. STUDS SHALL BE SPACED A MAXIMUM OF 16" OC.
3. FRAMING CLIPS SHALL BE BY SIMPSON STRONG-TIE COMPANY, INC.
4. ALL PANEL EDGES SHALL BE BACKED WITH 2x NOMINAL OR WIDER FRAMING.
5. WHERE PANELS ARE APPLIED ON BOTH FACES OF A WALL, AND NAIL SPACING IS LESS THAN 6 INCHES ON CENTER EITHER SIDE, PANEL JOINTS SHALL BE OFFSET TO FALL ON DIFFERENT FRAMING MEMBERS, OR FRAMING SHALL BE 3-INCH NOMINAL OR THICKER AND NAILS ON EACH SIDE SHALL BE STAGGERED.
6. * WHERE ALLOWABLE SHEAR VALUES EXCEED 350 POUNDS PER FOOT, FOUNDATION SILL PLATES AND ALL FRAMING MEMBERS RECEIVING EDGE NAILING FROM ABUTTING PANELS SHALL NOT BE LESS THAN A SINGLE 3-INCH NOMINAL MEMBER. NAILS SHALL BE STAGGERED.
7. ANCHOR BOLTS TO BE A MINIMUM OF 5/8 INCH DIAMETER, EMBEDDED A MINIMUM OF 7 INCHES INTO CONCRETE OR MASONRY. MINIMUM OF TWO BOLTS PER PIECE, WITHIN 12" OF EACH END. PLATE WASHERS TO BE A MINIMUM OF 3"x3"x¼" FOR EA. BOLT. PLATE WASHER TO EXTEND TO WITHIN 1/2" OF SIDE(S) OF SHEATHING EDGE NAILING
8. OSB MAY BE SUBSTITUTED FOR CDX PLY.

△ = SHEAR DEMAND □ = UNIT LENGTH OF WALL

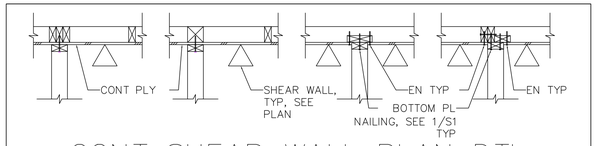

CONT SHEAR WALL PLAN DTL

Cont Shear Wall

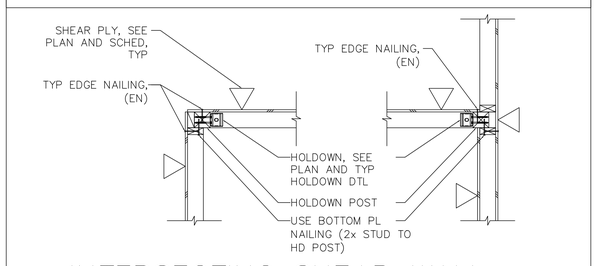

INTERSECTING SHEAR WALL AND HOLDOWN PLAN DETAIL

Intersecting Shear Wall

REGISTERED PROFESSIONAL ENGINEER TIM D. WANN No. 62913 Exp. 6/26 CIVIL STATE OF CALIFORNIA

REVISIONS

TIM WANN STRUCTURAL DESIGN INC.
P.O. BOX 3581
FREEDOM, CA. 95018 (831) 479-1513
C.E. 62913

FRAMING NOTES

DATE:
SCALE:
DRAWN:TW
JOB NO.
SHEET D-2
OF SHEETS

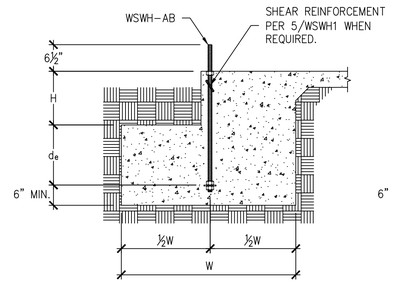

SLAB ON GRADE FOUNDATION

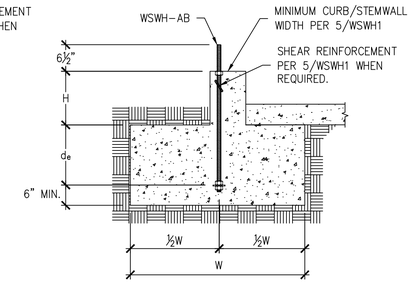

CURB OR STEMWALL FOUNDATION

NOTES :
1. SEE 2/WSWH1 FOR DIMENSIONS AND ADDITIONAL NOTES.
2. SEE 5/WSWH1 FOR SHEAR REINFORCEMENT WHEN REQUIRED.
3. MAXIMUM H = $l_e - d_e$. SEE 3/WSWH1 AND 4/WSWH1 FOR l_e.

DESIGNER IS PERMITTED TO MODIFY DETAILS FOR SPECIFIC CONDITIONS.

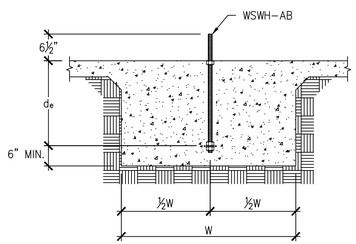

INTERIOR FOUNDATION

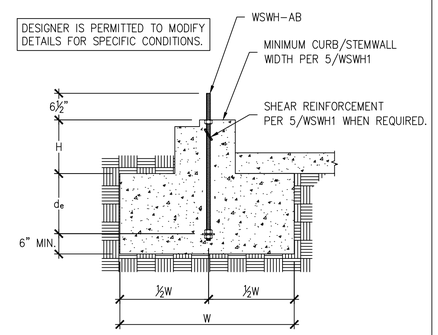

BRICK LEDGE FOUNDATION

STRONG-WALL® WSWH ANCHORAGE – TYPICAL SECTIONS | 1

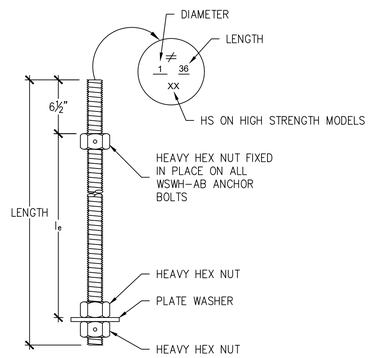

WSWH PANEL MODEL	MODEL NO.	DIAMETER	LENGTH	l_e
WSWH12, WSWH18 AND WSWH24	WSWH-AB1x24	1"	24"	15½"
	WSWH-AB1x24HS	1"	24"	15½"
	WSWH-AB1x30	1"	30"	21½"
	WSWH-AB1x30HS	1"	30"	21½"
	WSWH-AB1x36	1"	36"	27½"
	WSWH-AB1x36HS	1"	36"	27½"

WSWH ANCHOR BOLTS | 3

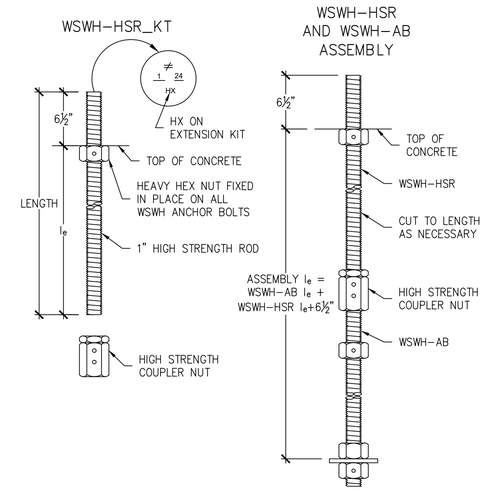

WSWH PANEL MODEL	MODEL NO.	DIAMETER	LENGTH	l_e
WSWH12, WSWH18 AND WSWH24	WSWH-HSR1x24KT	1"	24"	17½"
	WSWH-HSR1x36KT	1"	36"	29½"

WSWH ANCHOR BOLT EXTENSION | 4

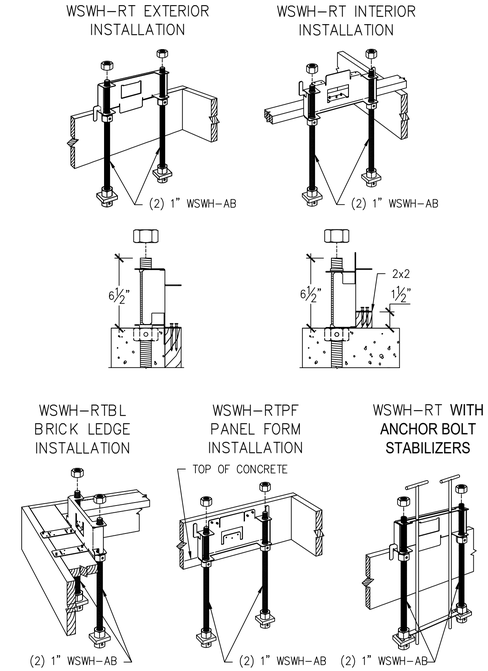

WSWH ANCHOR BOLT TEMPLATES | 6

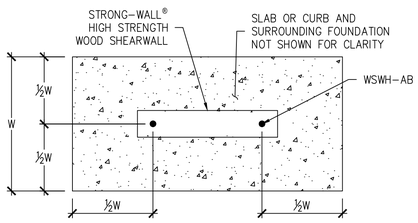

FOUNDATION PLAN VIEW

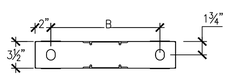

WSWH PLAN VIEW
ANCHORAGE LAYOUT

ANCHOR BOLT LAYOUT	
STRONG-WALL® HIGH STRENGTH WOOD SHEARWALL MODEL NO.	DISTANCE FROM CENTER-TO-CENTER OF WSWH-AB, B (in)
WSWH12	8⅛
WSWH18	14
WSWH24	20

NOTES :
1. ANCHORAGE DESIGNS CONFORM TO ACI 318-11 APPENDIX D, ACI 318-14 CHAPTER 17 AND ACI 318-19 CHAPTER 17 WITH NO SUPPLEMENTARY REINFORCEMENT FOR CRACKED OR UNCRACKED CONCRETE AS NOTED.
2. ANCHOR STRENGTH INDICATES REQUIRED GRADE OF WSWH-AB ANCHOR BOLT. STANDARD (ASTM F1554 GRADE 36) OR HIGH STRENGTH (HS) (ASTM A193 GRADE B7).
3. SEISMIC INDICATES SEISMIC DESIGN CATEGORY C-F. DETACHED 1 AND 2 FAMILY DWELLINGS IN SDC C MAY USE WIND ANCHORAGE SOLUTIONS. SEISMIC ANCHORAGE DESIGNS CONFORM TO ACI 318-11 SECTION D.3.3.4.3, ACI 318-14 SECTION 17.2.3.4.3 AND ACI 318-19 SECTION 17.10.5.3.
4. WIND INCLUDES SEISMIC DESIGN CATEGORY A AND B AND DETACHED 1 AND 2 FAMILY DWELLINGS IN SDC C.
5. FOUNDATION DIMENSIONS ARE FOR ANCHORAGE ONLY. FOUNDATION DESIGN (SIZE AND REINFORCEMENT) BY OTHERS. THE DESIGNER MAY SPECIFY ALTERNATE EMBEDMENT, FOOTING SIZE OR ANCHOR BOLT.
6. REFER TO 1/WSWH1 FOR d_e.

WSWH ANCHORAGE SOLUTIONS FOR 2500 PSI CONCRETE					
DESIGN CRITERIA	CONCRETE CONDITION	ANCHOR STRENGTH	WSWH-AB1 ANCHOR BOLT		
			ASD ALLOWABLE UPLIFT (lbs)	W (in)	d_e (in)
SEISMIC	CRACKED	STANDARD	16,000	33	11
			17,100	35	12
		HIGH STRENGTH	34,100	52	18
			36,800	55	19
	UNCRACKED	STANDARD	15,700	28	10
			17,100	30	10
		HIGH STRENGTH	33,500	45	15
			36,800	48	16
WIND	CRACKED	STANDARD	6,200	16	6
			11,400	24	8
			17,100	32	11
		HIGH STRENGTH	21,100	36	12
			27,300	42	14
			34,100	48	16
			36,800	51	17
	UNCRACKED	STANDARD	6,400	14	6
			12,500	22	8
			17,100	28	10
		HIGH STRENGTH	22,900	33	11
			26,400	36	12
			34,200	42	14
			36,800	44	15

WSWH ANCHORAGE SOLUTIONS FOR 3000 PSI CONCRETE					
DESIGN CRITERIA	CONCRETE CONDITION	ANCHOR STRENGTH	WSWH-AB1 ANCHOR BOLT		
			ASD ALLOWABLE UPLIFT (lbs)	W (in)	d_e (in)
SEISMIC	CRACKED	STANDARD	16,000	31	11
			17,100	33	11
		HIGH STRENGTH	33,900	49	17
			36,800	52	18
	UNCRACKED	STANDARD	16,300	27	9
			17,100	28	10
		HIGH STRENGTH	34,000	43	15
			36,800	46	16
WIND	CRACKED	STANDARD	5,600	14	6
			10,200	21	7
			17,100	30	10
		HIGH STRENGTH	20,000	33	11
			26,500	39	13
			33,600	45	15
			36,800	48	16
	UNCRACKED	STANDARD	6,200	13	6
			12,800	21	7
			17,100	26	9
		HIGH STRENGTH	21,800	30	10
			28,900	36	12
			33,100	39	13
			36,800	42	14

WSWH ANCHORAGE SOLUTIONS FOR 4500 PSI CONCRETE					
DESIGN CRITERIA	CONCRETE CONDITION	ANCHOR STRENGTH	WSWH-AB1 ANCHOR BOLT		
			ASD ALLOWABLE UPLIFT (lbs)	W (in)	d_e (in)
SEISMIC	CRACKED	STANDARD	16,000	27	9
			17,100	29	10
		HIGH STRENGTH	34,700	44	15
			36,800	46	16
	UNCRACKED	STANDARD	15,700	23	8
			17,100	25	9
		HIGH STRENGTH	33,900	38	13
			36,800	40	14
WIND	CRACKED	STANDARD	6,800	14	6
			11,600	20	7
			17,100	26	9
		HIGH STRENGTH	21,400	30	10
			28,400	36	12
			32,400	39	13
			36,800	43	15
	UNCRACKED	STANDARD	6,800	12	6
			12,400	18	6
			17,100	23	8
		HIGH STRENGTH	22,800	27	9
			26,700	30	10
			30,700	33	11
			36,800	37	13

STRONG-WALL® HIGH STRENGTH WOOD SHEARWALL TENSION ANCHORAGE SCHEDULE 2,500, 3,000 AND 4,500 PSI | 2

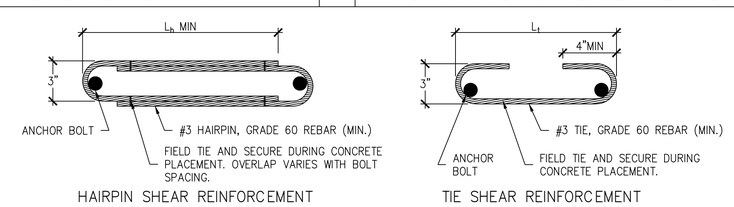

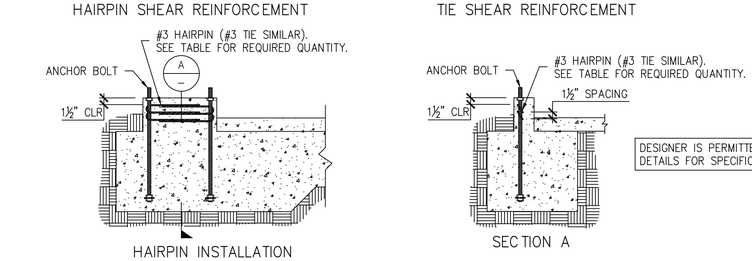

DESIGNER IS PERMITTED TO MODIFY DETAILS FOR SPECIFIC CONDITIONS.

STRONG-WALL® HIGH STRENGTH WOOD SHEARWALL SHEAR ANCHORAGE						
MODEL	SEISMIC[3]			WIND[4]		
	L_t OR L_h (in.)	SHEAR REINFORCEMENT	MIN. CURB/ STEMWALL WIDTH (in.)	SHEAR REINFORCEMENT	MIN. CURB/ STEMWALL WIDTH (in.)	ASD ALLOWABLE SHEAR LOAD, V (lb.)
						UNCRACKED / CRACKED
WSWH12	10¼	(1) #3 TIE	6	SEE NOTE 7	6	1,080 / 770
WSWH18	15	(2) #3 HAIRPINS[5,6]	6	(1) #3 HAIRPIN	6	HAIRPIN REINF. ACHIEVES MAX. ALLOW SHEAR LOAD OF THE WSWH
WSWH24	19	(2) #3 HAIRPINS[5]	6	(2) #3 HAIRPINS[5]	6	

NOTES :
1. SHEAR ANCHORAGE DESIGNS CONFORM TO ACI 318-19, ACI 318-11 AND ACI 318-14 AND ASSUME MINIMUM 2,500 PSI CONCRETE.
2. SHEAR REINFORCEMENT IS NOT REQUIRED FOR INTERIOR FOUNDATION APPLICATIONS (PANEL INSTALLED AWAY FROM EDGE OF CONCRETE), OR BRACED WALL PANEL APPLICATIONS.
3. SEISMIC INDICATES SEISMIC DESIGN CATEGORY C THROUGH F. DETACHED 1 AND 2 FAMILY DWELLINGS IN SDC C MAY USE WIND ANCHORAGE SOLUTIONS. SEISMIC SHEAR REINFORCEMENT DESIGNS CONFORM TO ACI 318-19, SECTION 17.10.6.3, ACI 318-14, SECTION 17.2.3.5.3
4. WIND INCLUDES SEISMIC DESIGN CATEGORY A AND B.
5. ADDITIONAL TIES MAY BE REQUIRED AT GARAGE CURB OR STEMWALL INSTALLATIONS BELOW ANCHOR REINFORCEMENT PER DESIGNER.
6. USE (1) #3 HAIRPIN FOR WSWH18 WHEN STANDARD STRENGTH ANCHOR IS USED.
7. USE (1) #3 TIE FOR WSWH12 WHEN PANEL DESIGN SHEAR FORCE EXCEEDS TABULATED ANCHORAGE ALLOWABLE SHEAR LOAD.
8. #4 GRADE 40 SHEAR REINFORCEMENT MAY BE SUBSTITUTED FOR WSWH SHEAR ANCHORAGE SOLUTIONS.
9. CONCRETE EDGE DISTANCE FOR ANCHORS MUST COMPLY WITH ACI 318-19 SECTION 17.9.2, ACI 318-14 SECTION 17.7.2 AND ACI 318-11 SECTION D.8.2.
10. THE DESIGNER MAY SPECIFY ALTERNATE SHEAR ANCHORAGE.

STRONG-WALL® WSWH SHEAR ANCHORAGE SCHEDULE AND DETAILS | 5

NO.	DATE	REVISIONS
0	02-26-2021	FIRST RELEASE - 2018 IBC
1	03-16-2021	2021 IBC REVISIONS

REGISTERED PROFESSIONAL ENGINEER
SAM D. WANG
No. 62913
Exp. 6/26
CIVIL
STATE OF CALIFORNIA

SIMPSON Strong-Tie, Co. Inc.
• 5956 W. Las Positas Blvd. Pleasanton, CA 94588
• Tel: (800) 999-5099
• Website: www.strongtie.com

SIMPSON Strong-Tie
THERE IS NO EQUAL

STRONG-WALL® WSWH
ANCHORAGE DETAILS
ENGINEERED DESIGNS

SIMPSON Strong-Tie
THERE IS NO EQUAL

NAME
DATE 03-26-2021
SCALE N.T.S.
CHECKED
SHEET WSWH1
OF SHEETS
JOB NO.

STRONG-WALL® HIGH STRENGTH WOOD SHEARWALL MODELS

MODEL NO.	W (in.)	H (in.)	ANCHOR BOLTS		TOTAL WALL WEIGHT (lb.)
			QUANTITY	DIA. (in.)	
WSWH12x7	12	84	2	1	105
WSWH18x7	18	84	2	1	155
WSWH12x8	12	96	2	1	120
WSWH18x8	18	96	2	1	175
WSWH24x8	24	96	2	1	225
WSWH12x9	12	108	2	1	130
WSWH18x9	18	108	2	1	195
WSWH24x9	24	108	2	1	250
WSWH12x10	12	120	2	1	145
WSWH18x10	18	120	2	1	210
WSWH24x10	24	120	2	1	275
WSWH12x12	12	144	2	1	165
WSWH18x12	18	144	2	1	245
WSWH24x12	24	144	2	1	325
WSWH18x14	18	168	2	1	285
WSWH24x14	24	168	2	1	370
WSWH24x16	24	192	2	1	420
WSWH18x20	18	240	2	1	390
WSWH24x20	24	240	2	1	520

NOTES :
1. FOR HEIGHTS NOT LISTED, ORDER THE NEXT TALLEST PANEL AND TRIM TO FIT. MINIMUM TRIMMED HEIGHT FOR ALL PANELS IS 74½".
2. ALL PANELS COME WITH PRE-ATTACHED HOLDOWNS, TWO HEAVY HEX NUTS, TWO HEAVY BEARING PLATES, ONE WSWH-TP TOP CONNECTION PLATE WITH REQUIRED FASTENERS AND INSTALLATION INSTRUCTIONS.
3. ALL PANELS ARE 3½" THICK.

STRONG-WALL® WSWH MODELS 1

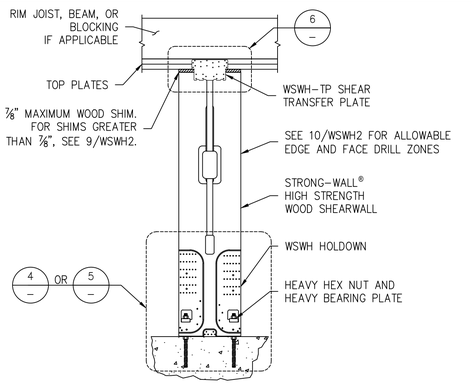

DESIGNER IS PERMITTED TO MODIFY DETAILS FOR SPECIFIC CONDITIONS.

ENSURE CONCRETE IS LEVEL AND SMOOTH BENEATH PANEL. GRIND OR FILL AS NECESSARY.

SINGLE STORY WSWH ON CONCRETE 2

STANDARD INSTALLATION BASE CONNECTION 4

DESIGNER IS PERMITTED TO MODIFY DETAILS FOR SPECIFIC CONDITIONS.

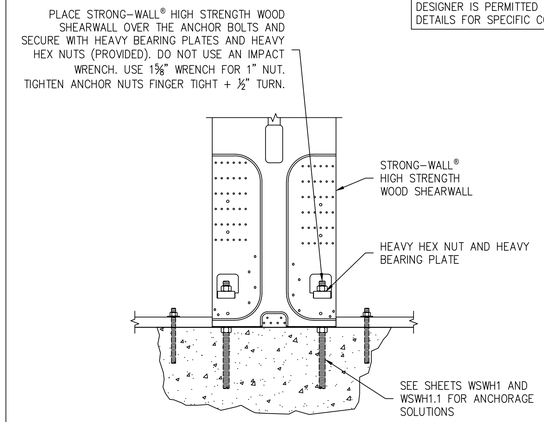

WOOD FLOOR SYSTEM BASE CONNECTION 5

DESIGNER IS PERMITTED TO MODIFY DETAILS FOR SPECIFIC CONDITIONS.

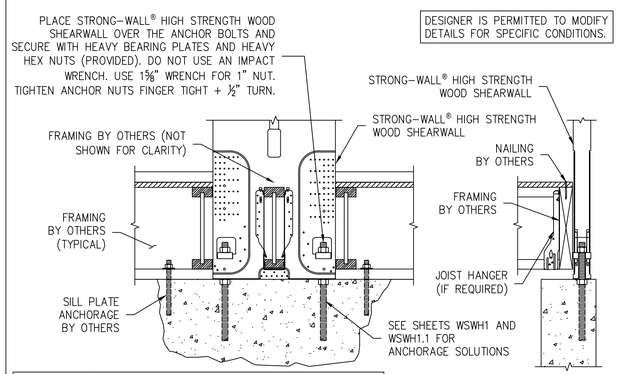

STRONG-WALL® HIGH STRENGTH WOOD SHEARWALL HEIGHT TO INCLUDE THE DEPTH OF THE FLOOR SYSTEM AND SHALL BE INSTALLED DIRECTLY ON THE FOUNDATION. SPECIFY PANEL HEIGHT FROM TOP OF FOUNDATION TO UNDERSIDE OF TOP PLATES OR BEAM.

TOP CONNECTION 6

WSWH-TP CONNECTION		
MODEL NO.	FASTENER QUANTITY	
	SWS16150	SDS25600
WSWH-TP12	14	2
WSWH-TP18	26	4
WSWH-TP24	46	8

DESIGNER IS PERMITTED TO MODIFY DETAILS FOR SPECIFIC CONDITIONS.

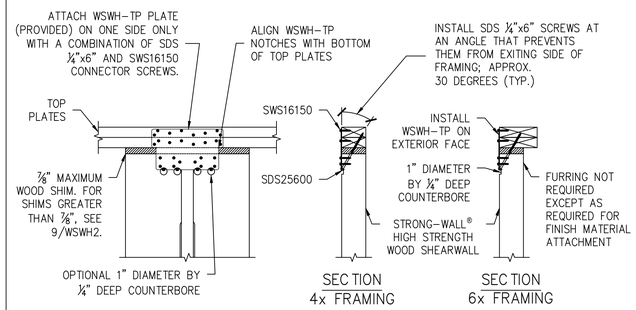

BACK-TO-BACK TOP CONNECTION 7

WSWH-TP CONNECTION		
MODEL NO.	FASTENER QUANTITY	
	SWS16150	SDS25600
WSWH-TP12	28	4
WSWH-TP18	52	8
WSWH-TP24	92	16

DESIGNER IS PERMITTED TO MODIFY DETAILS FOR SPECIFIC CONDITIONS.

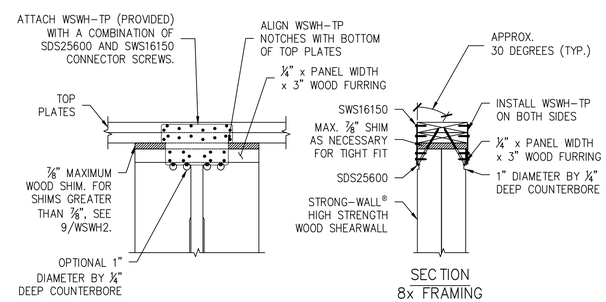

TOP OF WALL HEIGHT ADJUSTMENTS 9

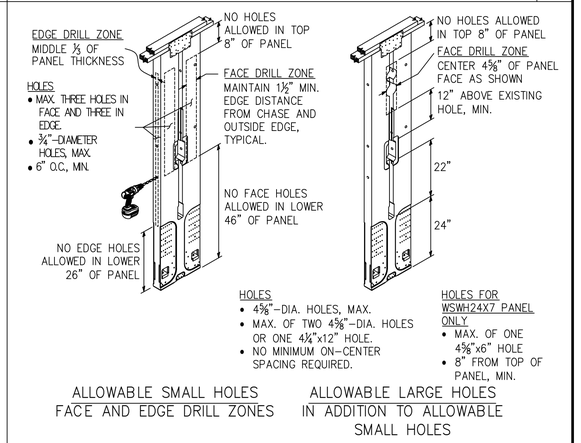

TRIM ZONE AND ALLOWABLE HOLES 10

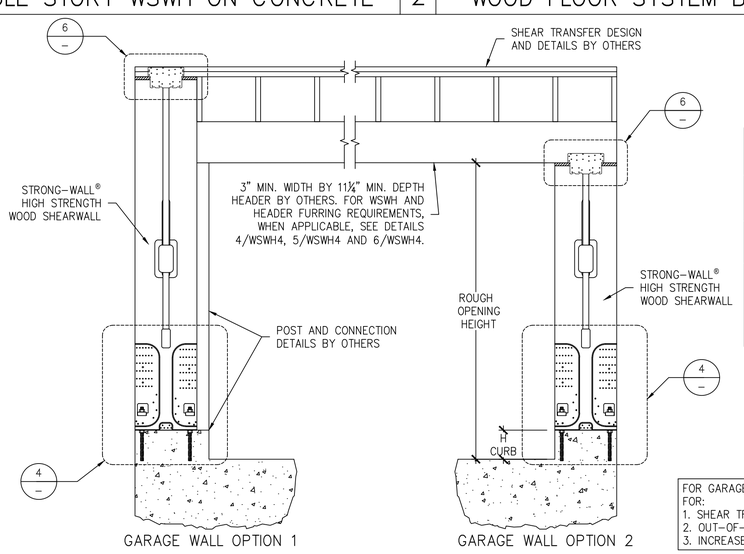

DESIGNER IS PERMITTED TO MODIFY DETAILS FOR SPECIFIC CONDITIONS.

WHEN WSWH-PS STRAPS OMITTED, ALLOWABLE SHEAR VALUES FOR STANDARD PANEL APPLY.

GARAGE HEADER ROUGH OPENING HEIGHT			
MODEL NO.	TRIMMED PANEL HEIGHT	H CURB	ROUGH OPENING HEIGHT
WSWH12x7 WSWH18x7 WSWH24x7	78"	5½"	6'-11½"
		6"	7'-0"
WSWH12x8 WSWH18x8 WSWH24x8	85½"	0"	7'-1½"
	93¾"	5½"	8'-2¾"
		6"	8'-3¾"

NOTES :
1. IF REQUIRED ROUGH OPENING HEIGHT EXCEEDS TABLE VALUE, SPECIFY NEXT TALLER PANEL AND TRIM AS NECESSARY. THE STRONG-WALL® HIGH STRENGTH WOOD SHEARWALL MAY BE TRIMMED TO A MINIMUM HEIGHT OF 74½".
2. FURRING DOWN GARAGE HEADER MAY BE REQUIRED FOR CORRECT ROUGH OPENING HEIGHT.

FOR GARAGE WALL OPTION 2, DESIGNER SHALL DESIGN AND DETAIL FOR:
1. SHEAR TRANSFER
2. OUT-OF-PLANE LOADING EFFECT
3. INCREASED OVERTURNING AND DRIFT DUE TO ADDITIONAL HEIGHT

ALTERNATE WSWH GARAGE FRONT OPTIONS 3

QTY. OF SDS¼"x6" SCREWS REQ'D.	
WSWH12	4
WSWH18	8
WSWH24	16

EDGE DISTANCE FOR SCREWS		
SLOPE	A (in.)	B (in.)
0:12-4:12	2	3
5:12-8:12	1½	4½
9:12-12:12	1½	5½

NOTES :
1. MAINTAIN END DISTANCES TO PREVENT SCREWS FROM PENETRATING THROUGH THE OUTER EDGES.
2. INSTALL SCREWS PERPENDICULAR TO THE TOP PLATE.
3. EDGE DISTANCES ASSUME DOUBLE TOP PLATE.

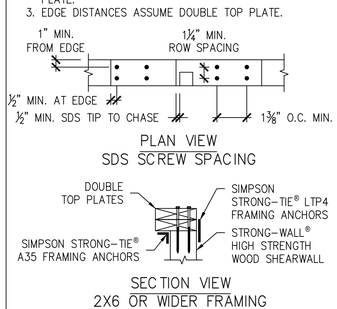

DESIGNER IS PERMITTED TO MODIFY DETAILS FOR SPECIFIC CONDITIONS.

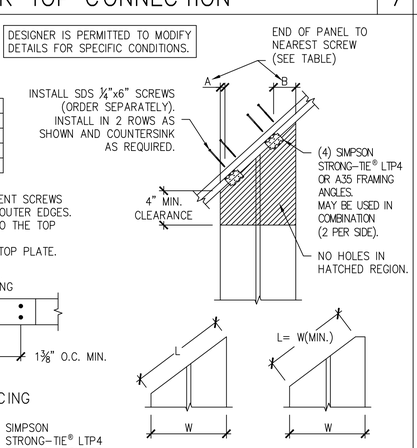

INSTALLATION NOTES :
1. ACTUAL CUT LENGTH (L) MUST BE GREATER THAN OR EQUAL TO PANEL WIDTH (W).
2. THIS DETAIL APPLICABLE FOR SLOPES UP TO 12:12.
3. PANELS TALLER THAN 12' MUST BE DESIGNED FOR THE APPLICATION.

RAKE WALL 8

1. STRONG-WALL® HIGH STRENGTH WOOD SHEARWALL IS MANUFACTURED AND TRADEMARKED BY "SIMPSON STRONG-TIE COMPANY INC." HOME OFFICE: 5956 W. LAS POSITAS BLVD., PLEASANTON, CA 94588 TEL: (800) 999-5099, FAX: (925) 847-1597. "SIMPSON STRONG-TIE COMPANY INC." IS AN ISO 9001-2008 REGISTERED COMPANY.
2. USE OF THIS PRODUCT IS SUBJECT TO THE APPROVAL OF THE LOCAL BUILDING DEPARTMENT.
3. THIS PRODUCT IS PART OF THE OVERALL LATERAL FORCE RESISTING SYSTEM OF THE STRUCTURE. DESIGN OF THE BUILDING'S LATERAL FORCE RESISTING SYSTEM, INCLUDING THE LOAD PATH TO TRANSFER LATERAL FORCES FROM THE STRUCTURE TO THE GROUND, IS THE RESPONSIBILITY OF THE DESIGNER.
4. ENGINEER OF RECORD IS PERMITTED TO MODIFY DETAILS FOR SPECIFIC CONDITIONS.
5. THE CONTRACTOR SHALL VERIFY ALL DIMENSIONS, CONDITIONS, ELEVATIONS, ETC. PRIOR TO INSTALLATION OF ANY COMPONENTS FOR THE STRONG-WALL SB SYSTEM. IF ANY DISCREPANCIES ARE FOUND, THEY SHALL BE BROUGHT TO THE ATTENTION OF THE DESIGNER FOR CLARIFICATION PRIOR TO CONSTRUCTION.
6. INSTALLATION OF PRODUCT SHALL BE DONE IN CONFORMANCE TO THESE DRAWINGS. THE PERFORMANCE OF MODIFIED PRODUCTS OR ALTERED INSTALLATION PROCEDURES ARE THE SOLE RESPONSIBILITY OF THE DESIGNER.
7. SIMPSON STRONG-TIE COMPANY INC. RESERVES THE RIGHT TO CHANGE SPECIFICATIONS, DESIGNS, AND MODELS WITHOUT NOTICE OR LIABILITY FOR SUCH CHANGES.
8. ALL HARDWARE CALLED OUT IS SIMPSON STRONG-TIE.
9. SEE ICC-ES ESR-2652 OR CITY OF LOS ANGELES RR25730 AS APPLICABLE FOR ADDITIONAL INFORMATION.

NOTES 11

NO.	DATE	REVISIONS
0	11-20-2020	FIRST RELEASE - 2018 IBC
1	03-16-2021	2021 IBC REVISIONS

REGISTERED PROFESSIONAL ENGINEER — JOHN D. WANN — No. 62913 — Exp. 6/26 — CIVIL — STATE OF CALIFORNIA

SIMPSON Strong-Tie, Co. Inc.
• 5956 W. Las Positas Blvd. Pleasanton, CA 94588
• Tel: (800) 999-5099
• Website: www.strongtie.com

SIMPSON Strong-Tie — THERE IS NO EQUAL

STRONG-WALL® WSWH

FRAMING DETAILS
ENGINEERED DESIGNS

SIMPSON Strong-Tie — THERE IS NO EQUAL

NAME
DATE 03-16-2021
SCALE N.T.S.
CHECKED
SHEET WSWH2
OF SHEETS
JOB NO.

CERTIFICATE OF COMPLIANCE - RESIDENTIAL PERFORMANCE COMPLIANCE METHOD

CF1R-PRF-01-E

Project Name: Lauesen Addition & Remodel
Calculation Date/Time: 2026-01-25T18:23:59-08:00
(Page 1 of 12)
Calculation Description: Title 24 Analysis
Input File Name: Lauesen Addition & Remodel_V10 ID 10562.ribd25x

GENERAL INFORMATION				
01	Project Name	Lauesen Addition & Remodel		
02	Run Title	Title 24 Analysis		
03	Project Location	290 Pioneer Road		
04	City	Watsonville	05	Standards Version: 2025
06	Zip code: 95076		07	Software Version: EnergyPro 10.0
08	Climate Zone: 3		09	Front Orientation (deg/ Cardinal): 140
10	Building Type: Single family		11	Number of Dwelling Units: 1
12	Project Scope: Addition and/or Alteration		13	Number of Bedrooms: 3
14	Addition Cond. Floor Area (ft^2): 90		15	Number of Stories: 1
16	Existing Cond. Floor Area (ft^2): 1584		17	Fenestration Average U-factor: 0.27
18	Total Cond. Floor Area (ft^2): 1674		19	Glazing Percentage (%): 15.41%
20	ADU Bedroom Count: n/a		21	ADU Conditioned Floor Area: n/a
22	Fuel Type: Natural gas		23	No Dwelling Unit: No

COMPLIANCE RESULTS

Building Complies with Computer Performance

This building incorporates features that require field testing and/or verification by a certified ECC rater under the supervision of a CEC-approved ECC provider.

Building does not incorporate Special Features

REQUIRED SPECIAL FEATURES

The following are features that must be installed as condition for meeting the modeled energy performance for this computer analysis.

- NO SPECIAL FEATURES REQUIRED

ECC FEATURE SUMMARY

The following is a summary of the features that must be field verified by a certified ECC Rater as a condition for meeting the modeled energy performance for this computer analysis. Additional detail is provided in the building tables below. Registered CF2Rs and CF3Rs are required to be completed in the ECC Registry

- Kitchen range hood
- Duct leakage testing

CERTIFICATE OF COMPLIANCE - RESIDENTIAL PERFORMANCE COMPLIANCE METHOD

CF1R-PRF-01-E

Project Name: Lauesen Addition & Remodel
Calculation Date/Time: 2026-01-25T18:23:59-08:00
(Page 2 of 12)
Calculation Description: Title 24 Analysis
Input File Name: Lauesen Addition & Remodel_V10 ID 10562.ribd25x

Compliance Summary

	Long Term System Cost (LSC)[1]		Source Energy Use	Peak Cooling**
	Efficiency[2] ($/ft^2$-yr)	Total[3] ($/ft^2$-yr)	Total[3] (kBtu/ft^2-yr)	Electricity (kWh)
Standard Design	37.28			
Proposed Design	36.38			
Compliance Margins	0.9			
	Pass			

RESULT*: Complies

[1]Long-term System Cost (LSC) is a 30-year present value cost to California's energy system. LSC is not a predicted utility bill.
[2]Efficiency measures include energy efficient improvements such as better building envelope and more efficient mechanical equipment
[3]Total includes the sum of efficiency measures, solar photovoltaic (PV) measures and battery storage measures.
* Building complies when Proposed Design is equal to or less than Standard Design in all applicable compliance categories
** Peak cooling target represents 120% of the standard design building peak cooling energy use.

Standard Design PV Capacity: 0.00 kWdc

CERTIFICATE OF COMPLIANCE - RESIDENTIAL PERFORMANCE COMPLIANCE METHOD

CF1R-PRF-01-E

Project Name: Lauesen Addition & Remodel
Calculation Date/Time: 2026-01-25T18:23:59-08:00
(Page 3 of 12)
Calculation Description: Title 24 Analysis
Input File Name: Lauesen Addition & Remodel_V10 ID 10562.ribd25x

LSC AND SOURCE ENERGY COMPLIANCE RESULTS FOR PERFORMANCE COMPONENTS

Energy Use	Standard Design Source Energy (kBtu/ft^2-yr)	Standard Design LSC[1] ($/$ft^2$-yr)	Proposed Design Source Energy (kBtu/ft^2-yr)	Proposed Design LSC[1] ($/$ft^2$-yr)	Compliance Margin Source (kBtu/ft^2-yr)	Compliance Margin LSC[1] ($/$ft^2$-yr)
Space Heating	0	28.25	0	28.55	0	-0.3
Space Cooling	0	0.39	0	0.44	0	-0.05
IAQ Ventilation	0	0	0	0	0	0
Water Heating	0	8.64	0	7.39	0	1.25
Self Utilization/Flexibility Credit	n/a	n/a	n/a	0	n/a	0
Efficiency Compliance Total	0	37.28	0	36.38	0	0.9
Photovoltaics And Battery	n/a	n/a	n/a	0	n/a	0
Flexibility	n/a	n/a	n/a	n/a	n/a	n/a
Indoor Lighting	0	1.76	0	1.76	n/a	0
Appl. & Cooking	0	6.09	0	6.1	n/a	-0.01
Plug Loads	0	8.41	0	8.41	n/a	0
Outdoor Lighting	0	0.43	0	0.43	n/a	0
TOTAL COMPLIANCE	0	53.97	0	53.08	0.89	

CERTIFICATE OF COMPLIANCE - RESIDENTIAL PERFORMANCE COMPLIANCE METHOD

CF1R-PRF-01-E

Project Name: Lauesen Addition & Remodel
Calculation Date/Time: 2026-01-25T18:23:59-08:00
(Page 4 of 12)
Calculation Description: Title 24 Analysis
Input File Name: Lauesen Addition & Remodel_V10 ID 10562.ribd25x

ENERGY USE INTENSITY

	Standard Design (kBtu/ft^2 - yr)	Proposed Design (kBtu/ft^2 - yr)	Margin (kBtu/ft^2 - yr)	Margin Percentage
Gross EUI[1]	38.56	37.77	0.79	2.05
Net EUI[2]	38.56	37.77	0.79	2.05

Notes
1. Gross EUI is Energy Use Total (not including PV) / Total Building Area.
2. Net EUI is Energy Use Total (including PV) / Total Building Area.

BUILDING - FEATURES INFORMATION

01	02	03	04	05	06	07
Project Name	Conditioned Floor Area (ft^2)	Number of Dwelling Units	Number of Bedrooms	Number of Zones	Number of Ventilation Cooling Systems	Number of Water Heating Systems
Lauesen Addition & Remodel	1674	1	3	2	0	1

ZONE INFORMATION

01	02	03	04	05	06	07
Zone Name	Zone Type	HVAC System Name	Zone Floor Area (ft^2)	Avg. Ceiling Height	Water Heating System 1	Status
Zone Existing	Conditioned	Res HVAC1	1584	8	DHW Sys 1	Existing Unchanged
Zone Addition	Conditioned	Res HVAC1	90	8	DHW Sys 1	New

OPAQUE SURFACES SUMMARY

01	02	03	04	05	06	07	08	09	10	11
Name	Zone	Construction	Azimuth	Orientation	Gross Area (ft^2)	Window and Door Area (ft2)	Tilt (deg)	Wall Exceptions	Status	Verified Existing Condition
Front Wall	Zone Existing	Default Wall Prior to 197	140	Front	553	84	90	none	Existing	No
Left Wall	Zone Existing	Default Wall Prior to 197	230	Left	279	79	90	none	Existing	No

CERTIFICATE OF COMPLIANCE - RESIDENTIAL PERFORMANCE COMPLIANCE METHOD

CF1R-PRF-01-E

Project Name: Lauesen Addition & Remodel
Calculation Date/Time: 2026-01-25T18:23:59-08:00
(Page 5 of 12)
Calculation Description: Title 24 Analysis
Input File Name: Lauesen Addition & Remodel_V10 ID 10562.ribd25x

OPAQUE SURFACES SUMMARY

01	02	03	04	05	06	07	08	09	10	11
Name	Zone	Construction	Azimuth	Orientation	Gross Area (ft^2)	Window and Door Area (ft2)	Tilt (deg)	Wall Exceptions	Status	Verified Existing Condition
Back Wall	Zone Existing	Default Wall Prior to 197	320	Back	480	59	90	none	Existing	No
Right Wall	Zone Existing	Default Wall Prior to 197	50	Right	209	26	90	none	Existing	No
Left Wall 2	Zone Addition	R-15 Wall	230	Left	11	0	90	none	New	n/a
Back Wall 2	Zone Addition	R-15 Wall	320	Back	72	0	90	none	New	n/a
Right Wall 2	Zone Addition	R-15 Wall	50	Right	80	10	90	none	New	n/a
Interior Surface	Zone Existing>>Zone Addition	R-0 Wall	n/a	n/a	70	0	n/a		New	n/a
Interior Surface 2	Zone Addition>>Zone Existing	R-0 Wall	n/a	n/a	69	0	n/a		New	n/a
Roof	Zone Existing	Default Roof Prior to 197	n/a	n/a	714	n/a	n/a		Existing	No
Vaulted Roof 2	Zone Existing	R-30 Roof Attic	n/a	n/a	870	n/a	n/a		Altered	No
Raised Floor	Zone Existing	Default Floor Crawlspace	n/a	n/a	1225	n/a	n/a		Existing	No
Raised Floor 2	Zone Addition	R-19 Floor Crawlspace	n/a	n/a	45	n/a	n/a		New	n/a

OPAQUE SURFACES - CATHEDRAL CEILINGS

01	02	03	04	05	06	07	08	09	10	11	12
Name	Zone	Construction	Azimuth	Orientation	Area (ft^2)	Skylight Area (ft^2)	Roof Rise (x in 12)	CRRC Rated Roof Reflectance	CRRC Rated Roof Emittance	Status	Verified Existing Condition
Vaulted Roof	Zone Addition	R-30 Roof Cathedral	140	Front	90	0	6	0.1	0.85	New	n/a

CERTIFICATE OF COMPLIANCE - RESIDENTIAL PERFORMANCE COMPLIANCE METHOD

CF1R-PRF-01-E

Project Name: Lauesen Addition & Remodel
Calculation Date/Time: 2026-01-25T18:23:59-08:00
(Page 6 of 12)
Calculation Description: Title 24 Analysis
Input File Name: Lauesen Addition & Remodel_V10 ID 10562.ribd25x

ATTIC

01	02	03	04	05	06	07	08a	09	10
Name	Construction	Type	Roof Rise (x in 12)	CRRC Rated Roof Reflectance	CRRC Rated Roof Emittance	Radiant Barrier	Above Roof Deck Air Gap	Status	Verified Existing Condition
Attic Zone Existing	Attic RoofZone Existing	Ventilated	6	0.1	0.85	No	No	Existing	No

FENESTRATION / GLAZING

01	02	03	04	05	06	07	08	09	10	11	12
Name	Type	Surface	Orientation	Azimuth	Mult.	Area (ft^2)	U-factor	SHGC	Rating Source	Status	Verified Existing Condition
Front Windows	Window	Front Wall	Front	140	1	84	0.71	0.73	Table 110.6-B	Existing	No
Left Windows	Window	Left Wall	Left	230	1	52	0.71	0.73	Table 110.6-B	Existing	No
Left Windows 2	Window	Left Wall	Left	230	1	21	0.27	0.5	NFRC	Altered	No
Left Windows 3	Window	Left Wall	Left	230	1	6	0.27	0.5	NFRC	New	NA
Back Windows	Window	Back Wall	Back	320	1	46	0.71	0.73	Table 110.6-B	Existing	No
Back Windows 2	Window	Back Wall	Back	320	1	13	0.27	0.5	NFRC	Altered	No
Right Windows	Window	Right Wall	Right	50	1	26	0.71	0.73	Table 110.6-B	Existing	No
Right Windows 2	Window	Right Wall 2	Right	50	1	10	0.27	0.5	NFRC	New	NA

CERTIFICATE OF COMPLIANCE - RESIDENTIAL PERFORMANCE COMPLIANCE METHOD

CF1R-PRF-01-E

Project Name: Lauesen Addition & Remodel
Calculation Date/Time: 2026-01-25T18:23:59-08:00
(Page 7 of 12)
Calculation Description: Title 24 Analysis
Input File Name: Lauesen Addition & Remodel_V10 ID 10562.ribd25x

FENESTRATION / GLAZING

01	02	03	04	05	06	07	08	09	10	11	12
Name	Type	Surface	Orientation	Azimuth	Mult.	Area (ft^2)	U-factor	SHGC	Rating Source	Status	Verified Existing Condition
Total North Facing Fenestration						64					
Total East Facing Fenestration						36					
Total South Facing Fenestration						59					
Total West Facing Fenestration						79					

SLAB FLOORS

01	02	03	04	05	06	07	08	09
Name	Zone	Area (ft^2)	Perimeter (ft)	Edge Insul. R-value	Edge Insul. Depth	Heated	Status	Verified Existing Condition
Slab-on-Grade	Zone Existing	359	78	none	0	No	Existing	No
Slab-on-Grade 2	Zone Addition	45	28	none	0	No	New	n/a

OPAQUE SURFACE CONSTRUCTIONS

01	02	03	04	05	06	07	08	09
Construction Name	Surface Type	Construction Type	Framing	Total Cavity R-value	Interior / Exterior Continuous R-value	U-factor	Assembly Layers	Non-Std Spray Foam
Default Wall Prior to 197	Exterior Walls	Wood Framed Wall	2x4 @ 16 in. O. C.	R-0	None / None	0.361	Inside Finish: Gypsum Board Cavity / Frame: no insul. / 2x4 Exterior Finish: 3 Coat Stucco	☐

CERTIFICATE OF COMPLIANCE - RESIDENTIAL PERFORMANCE COMPLIANCE METHOD

CF1R-PRF-01-E

Project Name: Lauesen Addition & Remodel
Calculation Date/Time: 2026-01-25T18:23:59-08:00
(Page 8 of 12)
Calculation Description: Title 24 Analysis
Input File Name: Lauesen Addition & Remodel_V10 ID 10562.ribd25x

OPAQUE SURFACE CONSTRUCTIONS

01	02	03	04	05	06	07	08	09
Construction Name	Surface Type	Construction Type	Framing	Total Cavity R-value	Interior / Exterior Continuous R-value	U-factor	Assembly Layers	Non-Std Spray Foam
R-15 Wall	Exterior Walls	Wood Framed Wall	2x4 @ 16 in. O. C.	R-15	None / None	0.095	Inside Finish: Gypsum Board Cavity / Frame: R-15 / 2x4 Exterior Finish: 3 Coat Stucco	☐
R-30 Roof Cathedral	Cathedral Ceilings	Wood Framed Ceiling	2x12 @ 16 in. O. C.	R-30	None / None	0.036	Roofing: Light Roof (Asphalt Shingle) Roof Deck: Wood Siding/sheathing/decking Cavity / Frame: R-30 / 2x12 Inside Finish: Gypsum Board	☐
R-0 Wall	Interior Walls	Wood Framed Wall	2x4 @ 16 in. O. C.	R-0	None / None	0.277	Inside Finish: Gypsum Board Cavity / Frame: no insul. / 2x4 Other Side Finish: Gypsum Board	☐
Attic RoofZone Existing	Attic Roofs	Wood Framed Ceiling	2x4 @ 24 in. O. C.	R-0	None / 0	0.644	Roofing: Light Roof (Asphalt Shingle) Roof Deck: Wood Siding/sheathing/decking Cavity / Frame: no insul. / 2x4	☐

CERTIFICATE OF COMPLIANCE - RESIDENTIAL PERFORMANCE COMPLIANCE METHOD

CF1R-PRF-01-E

Project Name: Lauesen Addition & Remodel
Calculation Date/Time: 2026-01-25T18:23:59-08:00
(Page 9 of 12)
Calculation Description: Title 24 Analysis
Input File Name: Lauesen Addition & Remodel_V10 ID 10562.ribd25x

OPAQUE SURFACE CONSTRUCTIONS

01	02	03	04	05	06	07	08	09
Construction Name	Surface Type	Construction Type	Framing	Total Cavity R-value	Interior / Exterior Continuous R-value	U-factor	Assembly Layers	Non-Std Spray Foam
Default Floor Crawlspace	Floors Over Crawlspace	Wood Framed Floor	2x12 @ 16 in. O. C.	R-0	None / None	0.216	Floor Surface: Carpeted Floor Deck: Wood Siding/sheathing/decking Cavity / Frame: no insul. / 2x12	☐
R-19 Floor Crawlspace	Floors Over Crawlspace	Wood Framed Floor	2x6 @ 16 in. O. C.	R-19	None / None	0.05	Floor Surface: Carpeted Floor Deck: Wood Siding/sheathing/decking Cavity / Frame: R-19 in 5-1/2 in. (R-18) / 2x6	☐
Default Roof Prior to 197	Ceilings (below attic)	Wood Framed Ceiling	2x4 @ 16 in. O. C.	R-11	None / None	0.083	Over Ceiling Joists: R-1.9 Insul. Cavity / Frame: R-9.1 / 2x4 Inside Finish: Gypsum Board	☐
R-30 Roof Attic	Ceilings (below attic)	Wood Framed Ceiling	2x4 @ 24 in. O. C.	R-30	None / None	0.032	Over Ceiling Joists: R-20.9 Insul. Cavity / Frame: R-9.1 / 2x4 Inside Finish: Gypsum Board	☐

CERTIFICATE OF COMPLIANCE - RESIDENTIAL PERFORMANCE COMPLIANCE METHOD

CF1R-PRF-01-E

Project Name: Lauesen Addition & Remodel
Calculation Date/Time: 2026-01-25T18:23:59-08:00
(Page 10 of 12)
Calculation Description: Title 24 Analysis
Input File Name: Lauesen Addition & Remodel_V10 ID 10562.ribd25x

WATER HEATING SYSTEMS

01	02	03	04	05	06	07	08	09	10	11	12
Name	System Type	Distribution Type	Water Heater Name	Number of Units	Solar Heating System	Compact Distribution	ECC Verification	Water Heater Name (#)	Status	Verified Existing Condition	Existing Water Heating System
DHW Sys 1	Domestic Hot Water (DHW)	Standard	DHW Heater 1	1	n/a	None	n/a	DHW Heater 1 (1)	Altered	No	

WATER HEATERS

01	02	03	04	05	06	07	08	09	10	11	12	13	14	15
Name	Heating Element Type	Tank Type	# of Units	Tank Vol. (gal)	Heating Efficiency Type	Efficiency	Rated Input Type	Input Rating or Pilot	Tank Insulation R-value (hr/f/ft2)	Standby Loss or Recovery Eff	1st Hr. Rating or Flow Rate	Tank Location	Status	Verified Existing Condition
DHW Heater 1	Gas	Consumer Instantaneous	1	0	UEF	0.96	Btu/Hr	200000	0	n/a	n/a		Altered	No

WATER HEATERS - HEAT PUMP

01	02	03	04	05	06	07	08	09	10
Name	# of Units	Tank Vol. (gal)	NEEA Heat Pump Brand	NEEA Heat Pump Model	Tank Location	Duct Inlet Air Source	Duct Outlet Air Source	UEF	JA13 Compliant
DHW Heater 1	1		Generic					0.96	☐

HVAC - HEATING UNIT TYPES

01	02	03	04	05	06
Name	System Type	Number of Units	Heating Efficiency	Status	Verified Existing Condition
Heating Component 1	Central gas furnace	1	AFUE - 80	Existing	No

CERTIFICATE OF COMPLIANCE - RESIDENTIAL PERFORMANCE COMPLIANCE METHOD

CF1R-PRF-01-E

Project Name: Lauesen Addition & Remodel
Calculation Date/Time: 2026-01-25T18:23:59-08:00
(Page 11 of 12)
Calculation Description: Title 24 Analysis
Input File Name: Lauesen Addition & Remodel_V10 ID 10562.ribd25x

HVAC - DISTRIBUTION SYSTEMS

01	02	03	04	05	06	07	08	09	10	11
Name	Type	Design Type	Duct Ins. R-value		Duct Location		Status	Verified Existing Condition	Existing Distribution system	New Ducts >= 25 ft
			Supply/Return		Supply	Return				
Air Distribution System 1	Unconditioned attic	Non-Verified	R-6		Attic	Attic	Existing + New	No		Yes

CERTIFICATE OF COMPLIANCE - RESIDENTIAL PERFORMANCE COMPLIANCE METHOD

CF1R-PRF-01-E

Project Name: Lauesen Addition & Remodel
Calculation Date/Time: 2026-01-25T18:23:59-08:00
(Page 12 of 12)
Calculation Description: Title 24 Analysis
Input File Name: Lauesen Addition & Remodel_V10 ID 10562.ribd25x

DOCUMENTATION AUTHOR'S DECLARATION STATEMENT

I. I certify that this Certificate of Compliance documentation is accurate and complete.

Documentation Author Name: James Blomquist	Documentation Author Signature: James Blomquist
Company: A Plus Green Energy Service	Signature Date: 01-25-2026
Address: 757 Freedom Blvd.	CEA/AEA/ECC Certification Identification (if applicable):
City/State/Zip: Watsonville, CA 95076	Phone: 831-728-7717

RESPONSIBLE PERSON'S DECLARATION STATEMENT

I certify the following under penalty of perjury, under the laws of the State of California:

1. The information provided on this Certificate of Compliance is true and correct.
2. I am eligible under Division 3 of the Business and Professions Code to accept responsibility for the building design or system design identified on this Certificate of Compliance (responsible designer).
3. The energy features and performance specifications, materials, components, and manufactured devices for the building design or system design identified on this Certificate of Compliance conform to the requirements of Title 24, Part 1 and Part 6 of the California Code of Regulations.
4. The building design features or system design features identified on this Certificate of Compliance are consistent with the information provided on other applicable compliance documents, worksheets, calculations, plans and specifications submitted to the enforcement agency for approval with this building permit application.
5. I understand that a registered copy of this Certificate of Compliance shall be made available with the building permit(s) issued for the building and shall be made available to the enforcement agency for all applicable inspections. I will take the necessary steps to fulfill this requirement.
6. I understand that a registered copy of this Certificate of Compliance is required to be included with the documentation builder provides to the building owner at occupancy. I will take the necessary steps to fulfill this requirement.

Responsible Designer Name: Robin Alaga	Responsible Designer Signature: Robin Alaga
Company: Alaga, Inc.	Date Signed: 01-25-2026
Address: 250 Evening Hills Lane	License:
City/State/Zip: Watsonville, CA 95076	Phone: 831-724-4994

Digitally signed by California Home Energy Efficiency Rating Services (CHEERS). This digital signature is provided in order to secure the content of this registered document, and in no way implies Registration Provider responsibility for the accuracy of the information.

FCN10053

www.apges.com
A Plus Green Energy Services
831.728.7717
408.310.0081

Federally Approved Contractor

Licensed California Contractor
A & B 665195

ICC Building Inspector B1 & B2
8023419

ICC CalGreen Inspector

CalCerts | CHEERS HERS Rater

CABEC Certified Energy Analyst

Build it Green
Certified Green Building Professional
Rater / Advisor

A Plus Green Energy Services
757 Freedom Blvd ▪ Watsonville, CA 95076 ▪ 408.310.0081 ▪ www.apges.com

CERTIFIED HERS RATER / ENERGY ANALYSTS
In tomorrow's California, the sustainability of our environment and the preservation of our beautiful resources will be aided by responsible and professional analysis of our energy needs and uses.

JAMES BLOMQUIST
CEA R22-15-40140

CERTIFIED GreenPoint RATER

CABEC
California Association of Building Energy Consultants
CERTIFIED ENERGY PLANS EXAMINER
JAMES G. BLOMQUIST
NR06-10-3719

Energy Compliance

Lauesen Addition & Remodel
290 Pioneer Road
Watsonville, CA 95076

Project id 10562

EN.1

1/26/2026

2025 Single-Family Residential Mandatory Requirements Summary

NOTE: Single-family residential buildings subject to the Energy Code must comply with all applicable mandatory measures, regardless of the compliance approach used. Review the respective sections for more information.

Space Conditioning, Water Heating, and Plumbing System:

§ 110.0-110.3:	**Certification.** Heating, ventilation, and air conditioning (HVAC) equipment, water heaters, and all other regulated appliances must be certified by the manufacturer to the California Energy Commission.
§ 110.2(a):	**HVAC Efficiency.** Equipment must meet the applicable efficiency requirements in Tables 110.2-A through -L. *
§ 110.2(b):	**Controls for Heat Pumps with Supplementary Heaters.** Heat pumps with supplementary heaters must have control requirements as specified in § 150.0(h)7 and § 150.0(j)2. *
§ 110.2(c):	**Thermostats.** All heating or cooling systems not controlled by a central energy management control system (EMCS) must have a setback thermostat. *
§ 110.3(c)3:	**Insulation.** Unfired service water heater storage tanks and solar water-heating backup tanks must have adequate insulation, or tank surface heat loss rating.
§ 110.3(c)6:	**Isolation Valves.** Instantaneous water heaters with an input rating greater than 6.8 kBtu per hour (2 kW) must have isolation valves with hose bibbs or other fittings on both cold and hot water lines to allow for flushing the water heater when the valves are closed.
§110.3(c)7:	**Backup Heat and Ventilation.** Air-source heat pump water heaters must have backup heat (internal or external) if inlet air is unconditioned, unless compressor cut-off temperature is below Heating Winter Median of Extremes from Reference Appendix JA2. Heat pump water heater installation space and/or communicating space(s) must meet minimum volume, ducting, and/or grille net free area by kBtu/h of compressor capacity.
§ 110.5:	**Pilot Lights.** Continuously burning pilot lights are prohibited for natural gas: fan-type central furnaces; household cooking appliances (except appliances without electrical supply voltage connection with pilot lights that consume less than 150 Btu/h); pool and spa heaters. *
§ 150.0(h)1:	**Building Cooling and Heating Loads.** Heating and/or cooling loads are calculated in accordance with the ASHRAE Handbook, Equipment Volume, Applications Volume, and Fundamentals Volume; the SMACNA Residential Comfort System Installation Standards Manual; or the ACCA Manual J using design conditions specified in § 150.0(h)2. *
§ 150.0(h)3A:	**Clearances.** Air conditioner and heat pump outdoor condensing units must have a clearance of at least five feet from any dryer outlet or vent.
§ 150.0(h)3B:	**Liquid Line Drier.** Air conditioners and heat pump systems must be equipped with liquid line filter driers if required, as specified by the manufacturer's instructions.
§ 150.0(h)5:	**System Selection.** Equipment sizing and selection must meet the cooling and heating loads of § 150.0(h)1 & 2, and systems must be sized per ACCA Manual S-2023 with no minimum cooling capacity. Furnace heating capacity must meet ACCA Manual S. Heat pump heating capacity must meet minimum CBC requirements without including supplementary heat with no limit on maximum heating capacity.
§ 150.0(h)6:	**Defrost.** Installer-adjustable defrost delay timers must be set to greater than or equal to 90 minutes. CF2R certification required. *
§ 150.0(h)7:	**Supplementary Heating Control Configuration:** Heat pumps with supplementary heating must have controls to lock supplementary heating above outside air temperature no greater than 35°F, allowed during defrost or emergency operation. CF2R certification required. *
§ 150.0(h)8:	**Sizing of Electric Resistance Supplementary Heat:** When heat pumps have electric resistance heat, the capacity of electric resistance heat must not exceed the heat pump nominal cooling capacity (at 95°F ambient conditions) multiplied by 2.7 kW per ton, rounded up to the closest kW.
§ 150.0(h)9:	**Capacity Variation with Third-party Thermostats:** For variable or multi-speed systems, the space conditioning system and thermostat must be capable of responding to heating and cooling loads by modulating system compressor speed and must meet thermostat requirements of § 150.0(j)2. CF2R certification required.
§ 150.0(i):	**Thermostat.** All heating or cooling systems including heat pumps which are not controlled by energy management control system (EMCS) must have setback thermostat. Additional requirements for thermostats that control heat pumps with supplemental heating include thermostat must display outdoor air temperature, must lock out supplementary heat when outdoor air temperature is above 35°F, and must notify when supplemental heat is in use. *
§ 150.0(j)1:	**Water Piping. Solar Water-heating System Piping, and Space Conditioning System Line Insulation.** All domestic hot water piping must be insulated as specified in § 609.12 of the California Plumbing Code. *
§ 150.0(j)2:	**Insulation Protection.** Piping insulation must be protected from damage, including from sunlight, moisture, equipment maintenance, and wind, as required by §120.3(b). Insulation exposed to weather must be water retardant and protected from UV light (no adhesive tapes). Insulation covering chilled water piping and refrigerant suction piping located outside the conditioned space must include, or be protected by, a Class I or II vapor retarder. Pipe insulation buried below grade must be installed in a waterproof and non-crushable casing or sleeve.
§ 150.0(n)1:	**Gas or Propane Water Heating Systems.** Systems using gas or propane water heaters to serve individual dwelling units must designate a space at least 2.5' x 2.5' x 7' suitable for the future installation of a heat pump water heater, and meet electrical and plumbing requirements, based on the distance between this designated space and the water heater location; and a condensate drain no more than 2' higher than the base of the water heater
§ 150.0(n)2:	**Solar Water Heating Systems.** Solar water heating systems and collectors must be certified and rated by the Solar Rating and Certification Corporation (SRCC), the International Association of Plumbing and Mechanical Officials, Research and Testing (IAPMO R&T), or by a listing agency that is approved by the Executive Director.

Ducts and Fans

§110.8(d)3:	**Ducts.** Insulation installed on an existing space-conditioning duct must comply with § 604.0 of the California Mechanical Code (CMC). If a contractor installs the insulation, the contractor must certify to the customer, in writing, that the insulation meets this requirement.
§ 150.0(m)1:	**CMC Compliance.** All air-distribution system ducts and plenums must meet CMC §§ 601.0-605.0 and ANSI/SMACNA-006-2006 HVAC Duct Construction Standards Metal and Flexible 3rd Edition. Portions of supply- and return-air ducts and plenums must be insulated to R-6.0 or higher. Ducts located entirely in conditioned space as confirmed via field verification and diagnostic testing (RA3.1.4.3.8) do not require insulation; in dwelling units with attics, the ducts must be below the ceiling separating occupiable space from the attic. Connections of metal ducts and inner core of flexible ducts must be mechanically fastened. Openings must be sealed with mastic, tape, or other duct-closure system that meets applicable UL requirements; or aerosol sealant that meets UL 723. The combination of mastic and either mesh or tape must be used to seal openings greater than ¼", if mastic or tape is used. Building cavities, air handler support platforms, and plenums designed or constructed with materials other than sealed sheet metal, duct board or flexible duct must not be used to convey conditioned air. Building cavities and support platforms may contain ducts; ducts installed in these spaces must not be compressed. *
§ 150.0(m)2:	**Factory-Fabricated Duct Systems** must comply with applicable requirements of UL 181 for duct construction, connections, and closures; joints and seams of duct systems and their components must not be sealed with cloth back rubber adhesive duct tapes unless such tape is used in combination with mastic and draw bands.
§ 150.0(m)3:	**Field-Fabricated Duct Systems** must comply with applicable requirements for: pressure-sensitive tapes, mastics, sealants, and other requirements specified for duct construction.
§ 150.0(m)7:	**Backdraft Damper.** Fan systems that exchange air between conditioned space and outdoors must have backdraft or automatic dampers.
§ 150.0(m)8:	**Gravity Ventilation Dampers.** Gravity ventilating systems serving conditioned space must have either automatic or readily accessible, manually operated dampers in all openings to the outside, except combustion inlet and outlet air openings and elevator shaft vents.
§ 150.0(m)9:	**Protection of Insulation.** Insulation must be protected from damage due to sunlight, moisture, equipment maintenance, and wind. Insulation exposed to weather must be suitable for outdoor service (e.g., protected by aluminum, sheet metal, painted canvas, or plastic cover). Cellular foam insulation must be protected as above or painted with a water retardant and solar radiation-resistant coating.
§ 150.0(m)10:	**Porous Inner Core Flex Duct.** Flex ducts with porous inner cores must have a non-porous layer or air barrier between the inner core and outer vapor barrier.
§ 150.0(m)11:	**Duct System Sealing and Leakage Test.** When space conditioning systems use forced air duct systems to supply conditioned air to an occupiable space, the ducts must be sealed and duct leakage tested, as confirmed through field verification and diagnostic testing, in accordance with Reference Residential Appendix RA3.1.
§ 150.0(m)12:	**Air Filtration.** Space conditioning systems with ducts exceeding 10 feet and the supply side of ventilation systems must have MERV 13 or equivalent filters. Filters for space conditioning systems must have a two inch depth, or can be one inch if sized per Equation 150.0-A. Clean-filter pressure drop and labeling must meet the requirements in §150.0(m)12. Filters must be accessible for regular service. Filter racks or grilles must use gaskets, sealing, or other means to close gaps around the inserted filters and prevents air from bypassing the filter. *
§ 150.0(m)13:	**Space Conditioning System Airflow Rate and Fan Efficacy.** Space conditioning systems that use ducts to supply cooling must have a hole for the placement of a static pressure probe, or a permanently installed static pressure probe in the supply plenum. Airflow must be ≥ 350 CFM per ton of nominal cooling capacity, and an air-handling unit fan efficacy ≤ 0.45 watts per CFM for gas furnace air handlers and ≤ 0.58 watts per CFM for all others. Small duct high velocity systems must provide an airflow ≥ 250 CFM per ton of nominal cooling capacity, and an air-handling unit fan efficacy ≤ 0.62 watts per CFM. Field verification testing is required in accordance with Reference Residential Appendix RA3.3. *

Ventilation and Indoor Air Quality:

§ 150.0(o)1:	**Requirements for Ventilation and Indoor Air Quality.** All dwelling units shall meet the requirements of ASHRAE Standard 62.2, Ventilation and Acceptable Indoor Air Quality in Residential Buildings subject to the amendments specified in §150.0(o)1. *
§ 150.0(o)1B:	**Central Fan Integrated (CFI) Ventilation Systems.** Continuous operation of CFI air handlers used in CFI systems is not a permissible method to provide whole-dwelling unit ventilation airflow required per §150.0(o)1C. A motorized damper(s) shall be installed on the ventilation duct(s) that prevents all airflow through the space conditioning duct system when the damper(s) is closed and controlled per §150.0(o)1Biii&iv. CFI ventilation systems must have controls that track outdoor air ventilation run time, and either open or close the motorized damper(s) for compliance with §150.0(o)1C.
§ 150.0(o)1C:	**Whole-Dwelling Unit Mechanical Ventilation for Single-Family dwellings.** Single-family dwellings shall have mechanical ventilation specified in §150.0(o)1C and 150.0(o)1Civ.Single family detached dwelling units and attached dwelling units not sharing ceilings or floors with other dwelling units, occupiable spaces, public garages, or commercial spaces may reduce their required mechanical ventilation rates in accordance with §150.0(o)1Ciii-ii.* Vertically attached dwelling units shall not reduce their minimum ventilation rates in accordance with §150.0(o)1Ciii-iii.
§ 150.0(o)1G:	**Local Mechanical Exhaust.** Kitchens and bathrooms shall have local mechanical exhaust; nonenclosed kitchens shall have demand-controlled exhaust system meeting requirements of §150.0(o)1Giii, enclosed kitchens and bathrooms shall either use demand-controlled as specified in §150.0(o)1Giii or continuous exhaust as specified in §150.0(o)1Giv. Airflow shall be measured by the installer per §150.0(o)1Gv, and rated for sound per §150.0(o)1Gvi. *
§ 150.0(o)1H-J:	**Airflow Measurement, Sound Ratings, Label of Whole-Dwelling Unit Ventilation Systems.** The airflow required per §150.0(o)1C shall be measured by using a flow hood, flow grid, or other airflow measuring device at the fan's inlet or outlet terminals/grilles per Reference Residential Appendix RA3.7. Whole-Dwelling unit ventilation systems shall be rated for sound per ASHRAE 62.2 §7.3 at no less than the minimum airflow rate required by §150.0(o)1C. Manual on-off switches must be labeled per §150.0(o)1J.
§ 150.0(o)2:	**Field Verification and Diagnostic Testing.** Whole-Dwelling Unit ventilation airflow, vented range hood airflow and sound rating, and HRV and ERV fan efficacy shall be verified in accordance with Reference Residential Appendix RA3.7. Vented range hoods shall be verified per Reference Residential Appendix RA3.7.4.3 to confirm if it is rated by HVI or AHAM to comply with the airflow rates and sound requirements per §150.0(o)1G

Electric and Battery Energy Storage Ready:

§ 150.0(s):	**Battery Energy Storage System (BESS) Ready.** All single-family residences that include one or two dwelling units, which a load serving entity provides with electrical service for the dwelling unit that is greater than 125 amps, shall meet at least one of the following: Either BESS-ready interconnection equipment with backed up capacity of 60 amps or more and four or more BESS supplied branch circuits in §150.0(s)2, or a dedicated raceway from the main service to a subpanel that supplies the branch circuits in § 150.0(s)2; at least four branch circuits must be identified and have their source collocated at a single panelboard suitable to be supplied by the BESS, with one circuit supplying the refrigerator, one lighting circuit near the primary exit, and one circuit supplying a sleeping room receptacle outlet; main panelboard must have a minimum busbar rating of 225 amps; sufficient space must be reserved to allow future installation of a system isolation equipment/transfer switch within 3 feet of the main panelboard, with raceways installed between the panelboard and the switch location to allow the connection of backup power source. *
§ 150.0(t):	**Heat Pump Space Heater Ready.** Systems using gas or propane furnaces to serve individual dwelling units must include: A dedicated unobstructed 240V branch circuit wiring installed within 3' of the furnace with circuit conductors rated at least 30 amps with the blank cover identified as "240V ready;" and a reserved main electrical service panel space to allow for the installation of a double pole circuit breaker permanently marked as "For Future 240V use."
§ 150.0(u):	**Electric Cooktop Ready.** Systems using gas or propane cooktop to serve individual dwelling units must include: A dedicated unobstructed 240V branch circuit wiring installed within 3' of the cooktop with circuit conductors rated at least 50 amps with the blank cover identified as "240V ready;" and a reserved main electrical service panel space to allow for the installation of a double pole circuit breaker permanently marked as "For Future 240V use."
§ 150.0(v):	**Electric Clothes Dryer Ready.** Clothes dryer locations with gas or propane plumbing to serve individual dwelling units must include: A dedicated unobstructed 240V branch circuit wiring installed within 3' of the dryer location with circuit conductors rated at least 30 amps with the blank cover identified as "240V ready;" and a reserved main electrical service panel space to allow for the installation of a double pole circuit breaker permanently marked as "For Future 240V use."

Lighting:

§ 110.9:	**Lighting Controls and Components.** All lighting control devices and systems, light sources, and luminaires must meet the applicable requirements of §110.9. *
§ 150.0(k)1A:	**Luminaire Efficacy.** All installed luminaires and light sources must meet the requirements of Reference Joint Appendix JA8, except lighting integral to exhaust fans, kitchen range hoods, bath vanity mirrors, and garage door openers; navigation lighting less than 5 watts; lighting internal to drawers, cabinets, and linen closets with an efficacy of at least 45 lumens per watt; and ceiling fan kits subject to DOE's Appliance and Equipment Standards. *
§ 150.0(k)1C:	**Recessed Downlight Luminaires in Ceilings.** Luminaires recessed into ceilings must not contain screw-based sockets, be airtight with air leakage rate < 2.0 cfm at 75 Pascals, and leak paths be sealed with a gasket or caulk. California Electrical Code Article 410.116 must also be met. *
§ 150.0(k)1D:	**Light Sources in Enclosed or Recessed Luminaires.** Lamps and other separable light sources installed in enclosed or recessed luminaires must meet the JA8 elevated temperature requirements, including marking requirements.
§ 150.0(k)1E:	**Blank Electrical Boxes.** The number of electrical boxes that are more than five feet above the finished floor and do not contain a luminaire or other device shall be no more than the number of bedrooms. These boxes must be served by a dimmer, vacancy sensor control, low voltage wiring, or fan speed control.
§ 150.0(k)2A:	**Indoor Lighting Controls.** Lighting must have readily accessible wall-mounted controls that allow the lighting to be manually turned on and off.
§ 150.0(k)2D:	**Controls Permitted.** An energy management control system (EMCS) may be used to comply with dimming, occupancy, and control requirements if it provides the functionality of the specified control per §110.9 and the physical controls specified in §150.0(k)2A. Controls must not bypass a dimmer, occupant sensor, or vacancy sensor function installed to comply with §150.0(k)2.
§ 150.0(k)2E:	**Automatic Shutoff Controls.** In bathrooms, garages, laundry rooms, utility rooms and walk-in closets, at least one installed luminaire must be controlled by an occupancy or vacancy sensor providing automatic-off functionality. Lighting inside drawers and cabinets with opaque fronts or doors must have controls that turn the light off when the drawer or door is closed.
§ 150.0(k)2F:	**Dimmers.** Lighting in habitable spaces (e.g., living rooms, dining rooms, kitchens, bedrooms) must have readily accessible wall-mounted dimming controls that allow the lighting to be manually adjusted up and down, except lighting integral to kitchen range hoods and bathroom exhaust fans, navigation lighting less than 5 watts, lighting internal to drawers, cabinetry with opaque fronts or doors and controlled by automatic-off controls, luminaires in a circuit with controlled lighting power less than 20 watts or controlled by an occupancy or vacancy sensor. Forward phase cut dimmers controlling LED light sources in these spaces must comply with NEMA SSL 7A. Lighting integrated with ceiling fan may be controlled via a remote control.
§ 150.0(k)2G:	**Independent Controls.** Lighting integral to exhaust fans shall be controlled independently from the fans. Lighting under cabinets or shelves, lighting in display cabinets, and switched outlets must be controlled separately from ceiling-installed lighting.
§ 150.0(k)3:	**Residential Outdoor Lighting.** Outdoor lighting permanently mounted to a single-family residential building or other buildings on the same lot must meet luminaire efficacy requirements of §150.0(k)1A, have a manual on/off switch and either a photocell and motion sensor, a photocell and automatic time switch, or an astronomical time clock. Controls that override to ON are not allowed, unless that override automatically returns the automatic control to its normal operation within 6 hours. An EMCS or other controls that provides the specified control functionality may be used but must meet all applicable requirements.
§ 150.0(k)4:	**Internally Illuminated Address Signs** must either comply with §140.8 or consume no more than 5 watts of power.
§ 150.0(k)5:	**Residential Garages for Eight or More Vehicles.** Lighting for residential parking garages for eight or more vehicles must comply with the applicable requirements for nonresidential garages in §§ 110.9, 130.0, 130.1, 130.4, 140.6, and 141.0.

2025 Single-Family Residential Mandatory Requirements Summary

Building Envelope:

§ 110.6(a)1:	**Air Leakage.** Manufactured fenestration, exterior doors, and exterior pet doors must limit air leakage to 0.3 CFM per square foot or less when tested per NFRC-400, ASTM E283, or AAMA/WDMA/CSA 101/I.S.2/A440-2011. *
§110.6(a)2-4:	**U-factor, Solar heat gain coefficient, Visible transmittance.** The fenestration product and exterior door's U-factor and solar heat gain coefficient (SHGC) shall be rated in accordance with NFRC 100 and NFRC 200, or use the applicable defaults in Table 110.6-A and TABLE 110.6-B. The visible transmittance (VT) shall be rated in accordance with NFRC 200 or ASTM E972, for tubular daylighting devices VT shall be rated using NFRC 203. *
§ 110.6(a)5:	**Labeling.** Fenestration products and exterior doors must have a label meeting the requirements of §10-111(a).
§ 110.6(b):	**Field-fabricated Exterior Doors and Fenestration** products must use U-factors from Table 110.6-A and solar heat gain coefficient (SHGC) values from Table 110.6-B. Must be caulked and/or weather-stripped. *
§ 110.7:	**Air Leakage.** All joints, penetrations, and other openings in the building envelope that are potential sources of air leakage must be caulked, gasketed, or weather-stripped.
§ 110.8(a):	**Insulation Certification by Manufacturers.** Insulation must be certified by the Department of Consumer Affairs, Bureau of Household Goods and Services (BHGS).
§ 110.8(g):	**Insulation Requirements for Heated Slab Floors.** Heated slab floors must be insulated per the requirements of §110.8(g).
§ 110.8(i):	**Roofing Products Solar Reflectance and Thermal Emittance.** The thermal emittance and aged solar reflectance values of the roofing material must meet the requirements of § 110.8(i) and be labeled per §10-113 when the installation of a cool roof is specified on the CF1R.
§ 110.8(j):	**Radiant Barrier.** When required, radiant barriers must have an emittance of 0.05 or less and be certified to the Department of Consumer Affairs.
§ 150.0(a):	**Roof Deck, Ceiling, and Rafter Roof Insulation.** Roof decks in newly constructed attics above conditioned space in climate zones 4 and 8-16 area-weighted average U-factor not exceeding U-0.184. Ceiling and rafter roofs minimum R-22 insulation in wood-frame ceiling; or area-weighted average U-factor must not exceed 0.043. Rafter roof alterations minimum R-19 or area-weighted average U-factor of 0.054 or less. Attic access doors must have permanently attached insulation using adhesive or mechanical fasteners. The attic access must be gasketed to prevent air leakage. Insulation must be installed in direct contact with a roof or ceiling that is sealed to limit infiltration and exfiltration as specified in §110.7, including but not limited to placing insulation either above or below the roof deck or on top of a drywall ceiling. *
§ 150.0(b):	**Loose-fill Insulation.** Loose fill insulation must meet the manufacturer's required density for the labeled R-value.
§ 150.0(c):	**Wall Insulation.** Minimum R-15 insulation in 2x4 inch wood framing wall or have a U-factor of 0.095 or less, or R-21 in 2x6 inch wood framing or have a U-factor of 0.069 or less. Opaque non-framed assemblies must have an overall assembly U-factor not exceeding 0.102. Masonry walls must meet Tables 150.1-A. *
§ 150.0(d):	**Raised-floor Insulation.** Minimum R-19 insulation in wood framed raised-floor or 0.037 maximum U-factor. *
§ 150.0(f):	**Slab Edge Insulation.** Slab edge insulation must meet the following: water absorption rate no greater than 0.3 percent for insulation material alone without facings; water vapor permeance no greater than 2.0 perm per inch; protected from physical damage and UV light deterioration; and, when installed as part of a heated slab floor, meet the requirements of §110.8(g).
§ 150.0(g)1:	**Vapor Retarder.** In climate zones 1 through 16, the earth floor of unvented crawl space must be covered with a Class I or Class II vapor retarder. This requirement also applies to controlled ventilation crawl space for buildings complying with the exception to §150.0(d).
§ 150.0(g)2:	**Vapor Retarder.** In climate zones 14 and 16, a Class I or Class II vapor retarder must be installed on the conditioned space side of all insulation in all exterior walls, vented attics, and unvented attics with air-permeable insulation.
§ 150.0(q):	**Fenestration Products.** Fenestration, including skylights, separating conditioned space from unconditioned space or outdoors must have a maximum area-weighted average U-factor of 0.40.

Solar Readiness:

§ 110.10(a)1:	**Single-family Residences.** Single-family residences located in subdivisions with 10 or more single-family residences and where the application for a tentative subdivision map for the residences has been deemed complete and approved by the enforcement agency, which do not have a photovoltaic system installed, must comply with the requirements of §110.10(b)-(e).
§110.10(b)1A:	**Minimum Solar Zone Area.** The solar zone must comply with access, pathway, smoke ventilation, and spacing requirements per Title 24, Part 9, or other parts of Title 24, or any requirements adopted by a local jurisdiction. The solar zone must be located on the roof or overhang of the building and have a total area no less than 250 square feet. The solar zone total area must be comprised of areas with no dimension less than 5 feet and no less than 80 square feet each for buildings with roof areas up to 10,000 square feet; or no less than 160 square feet each for buildings with roof areas greater than 10,000 square feet. *
§ 110.10(b)2:	**Azimuth.** All sections of the solar zone located on steep-sloped roofs must have an azimuth between 90-300° of true north.
§ 110.10(b)3A:	**Shading.** No obstructions in solar zone, including but not limited to: vents, chimneys, architectural features, and roof mounted equipment. *
§ 110.10(b)3B:	**Shading.** Any obstruction located on the roof or any other part of the building that projects above a solar zone must be located at least twice the horizontal distance of the height difference between the highest point of the obstruction and the horizontal projection of the nearest point of the solar zone, measured in the vertical plane. *
§ 110.10(b)4:	**Structural Design Loads on Construction Documents.** For areas of the roof designated as a solar zone, the structural design loads for roof dead load and roof live load must be clearly indicated on the construction documents.
§ 110.10(c):	**Interconnection Pathways.** The construction documents must indicate: a location reserved for inverters and metering equipment and a pathway reserved for routing of conduit from the solar zone to the point of interconnection with the electrical service; and for single-family residences and central water-heating systems, a pathway reserved for routing plumbing from the solar zone to the water-heating system.

2025 Single-Family Residential Mandatory Requirements Summary

§ 110.10(d):	**Documentation.** A copy of the construction documents or a comparable document indicating the information from §110.10(b)-(c) must be provided to the occupant.
§ 110.10(e)1:	**Main Electrical Service Panel.** The main electrical service panel must have a minimum busbar rating of 200 amps.
§ 110.10(e)2:	**Main Electrical Service Panel.** The main electrical service panel must have a reserved space to allow for the installation of a double pole circuit breaker for a future solar electric installation. The reserved space must be permanently marked as "For Future Solar Electric."

Fireplaces, Decorative Gas Appliances, and Gas Log:

§ 110.5(e):	**Pilot Light.** Continuously burning pilot lights are not allowed for indoor and outdoor fireplaces.
§ 150.0(e)1:	**Closable Doors.** Masonry or factory-built fireplaces must have a closable metal or glass door covering the entire opening of the firebox.
§ 150.0(e)2:	**Combustion Intake.** Masonry or factory-built fireplaces must have a combustion outside air intake, which is at least six square inches in area and is equipped with a readily accessible, operable, and tight-fitting damper or combustion-air control device. *
§ 150.0(e)3:	**Flue Damper.** Masonry or factory-built fireplaces must have a flue damper with a readily accessible control. *

Pool and Spa Systems and Equipment:

§ 110.4(a):	**Certification by Manufacturers.** Pool/spa heating equipment must be certified as compliant with Appliance Efficiency Regulations; have an externally mounted, readily accessible on-off switch that allows shutting off the heater without adjusting the thermostat; permanent, easily readable weatherproof plate or card with energy efficiency rating and operating instructions.
§ 110.4(b)1:	**Heating Equipment.** Pool/spa heating equipment must meet applicable standards, by fuel type.
§ 110.4(b)2:	**Piping.** At least 18 inches of horizontal or vertical pipe installed between the filter and the heater; or dedicated suction and return lines; or built-in or built-up connections installed to allow for the future addition of solar heating equipment.
§ 110.4(b)3:	**Covers.** Outdoor pools or spas with electric or gas heater must have a cover.
§ 110.4(b)4:	**Directional Inlets and Time Switches for Pools.** Pools must have directional inlets that adequately mix the pool water, and a permanently installed time switch that will allow all pumps to be set or programmed to run only during off-peak electric demand periods.
§ 110.4(c):	**Heat Source Sizing.** Pool/spa heating systems must be solar heating system with collector area of at least 60% of pool/spa surface area; heat pump sized per JA16.3; combination of solar and heat pump; or use 60% or more on-site renewable/recoverable energy. *
§ 110.4(d):	**Heat Pump Pool Heaters with Supplementary Heating.** Controls for such systems must limit supplementary heating when the heating load can be met by the heat pump alone.
§ 110.5:	**Pilot Light.** Natural gas pool and spa heaters must not have a continuously burning pilot light.
§ 150.0(p):	**Pool Systems and Equipment Installation.** Single-family pool systems or equipment must meet the specified requirements for pump sizing, flow rate, piping, filters, and valves.

*Exceptions may apply.

ENERGY NOTES:

Attention designers, owners, builders. It is your responsibility to review the T24 documents for the required building features, and HERS measures.
If you have any questions, call before you build our buy.

Electric Ready & Renewables- New Construction : §150.0—Each electric ready item requires breaker space and labeling in panel. Single Family: Electric Ready 150.0(n) Water Heaters. Gas or propane water heaters must be installed in or adjacent to a space large enough to accommodate a Heat Pump Water Heater (2.5' x 2.5' x 7'). Within 3 ft of water heater 10/3 electrical feed. More than 3 ft 240 volt / 30 amp electrical feed.
150.0(t) Furnaces. Provide a 240 volt / 30 amp electrical feed to the furnace for future heat pump.
150.0(u) Cooktops. Include 240 volt / 50 amp feed for future cooktop
150.0(v) Dryers. Include 240 volt / 30 amp feed for dryer if the unit has a gas line for a dryer.

Solar Access Roof Area (SARA) - New Construction §140.10(a) / §170.2(f)
SARA includes: The area of a building's roof space capable of structurally supporting a PV system AND ☐ The area of all roof space on covered parking areas, carports and all other newly constructed structures on the site that are compatible with supporting a PV system per CA Building Code §1511.2 ☐ Exceptions: ☐ Any roof area that has < 70% annual solar access ☐ Occupied roof areas as specified by CA Building Code §503.1.4 ☐ Roof area that is otherwise not available due to compliance with other building code requirements if confirmed by the Executive Director.

Single Family: Solar Photovoltaic (PV) section §150.1(c)14 See section for solar sizing and exceptions

Energy Storage System (Battery Ready) - New Construction §150.0(s)
At least one of the following shall be provided: Interconnection equipment with a minimum backed up capacity of 60 amps. Or A dedicated raceway from the main service to a subpanel that supplies the branch circuits. Or A minimum of four branch circuits shall be identified— feeding: ☐ Refrigerator ☐ One lighting circuit near the primary egress ☐ A sleeping room receptacle outlet ☐ Main panel must be minimum 225 amps ☐ Sufficient space shall be reserved to allow future installation of a system isolation equipment or transfer switch within 3 feet of the main panelboard ☐ Raceways shall be installed between the panelboard and the system isolation equipment or transfer switch location to allow the connection of backup power source.
ACCA Manual J, D&S calculations are required to be submitted for plan review, followed by installing contractor and field inspected for compliance. T24 Load calc is based on ACCA J and may be used as sizing reference only. The load calc from the T24 doesn't include duct loss. See the T24 load calc page.

SAMPLE EQUIPMENT (Use any equipment that matches the min efficiencies)

Indoor Air Quality (IAQ) House Fan: Per ASHRAE 62.2
CFM / 1 Sones Sound Rating Max / Sample Model # Broan QTXE0
If this project is an addition under a 1,000 sf, the IAQ fan is not required.
For New Kitchen Hood sizing see Table 150.0-G

Dwelling Unit Floor Area (ft²)	Hood Over Electric Range	Hood Over Natural Gas Range
> 1500	50% CE or 110 CFM	70% CE or 180 CFM
> 1000 - 1500	50% CE or 110 CFM	80% CE or 250 CFM
750 - 1000	55% CE or 130 CFM	85% CE or 280 CFM
< 750	65% CE or 160 CFM	85% CE or 280 CFM

Water Heater: Tankless | EF: 95

HERS FEATURE SUMMARY is located in the CF1R. Make sure you review all of the REQUIREMENTS prior to beginning construction. For HERS Testing call 831-728-5503 for an appointment.

- **Kitchen range hood**
- **Duct leakage testing**

HVAC SYSTEM HEATING AND COOLING LOADS SUMMARY

Project Name: Lauesen Addition & Remodel
Date: 1/25/2026
System Name: Res HVAC
Floor Area: 1,674

ENGINEERING CHECKS		SYSTEM LOAD	COIL COOLING PEAK			COIL HTG. PEAK	
Number of Systems	1		CFM	Sensible	Latent	CFM	Sensible
Heating System							
Output per System	53,000	Total Room Loads	1,601	31,777	790	1,571	59,170
Total Output (Btuh)	53,000	Return Vented Lighting					
Output (Btuh/sqft)	31.7	Return Air Ducts		1,504			3,202
Cooling System		Return Fan		0			0
Output per System	0	Ventilation	0	0	0	0	0
Total Output (Btuh)	0	Supply Fan		0			0
Total Output (Tons)	0.0	Supply Air Ducts		1,504			3,202
Total Output (Btuh/sqft)	0.0						
Total Output (sqft/Ton)	0.0	TOTAL SYSTEM LOAD		34,784	790		65,573
Air System							
CFM per System	900	**HVAC EQUIPMENT SELECTION**					
Airflow (cfm)	900	Std FAU no AC		0	0		53,000
Airflow (cfm/sqft)	0.54						
Airflow (cfm/Ton)	0.0						
Outside Air (%)	0.0%	Total Adjusted System Output (Adjusted for Peak Design conditions)		0	0		53,000
Outside Air (cfm/sqft)	0.00						
Note: values above given at ARI conditions		TIME OF SYSTEM PEAK		Aug 3 PM			Jan 1 AM

HEATING SYSTEM PSYCHROMETRICS (Airstream Temperatures at Time of Heating Peak)

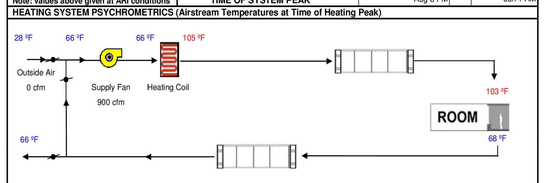

COOLING SYSTEM PSYCHROMETRICS (Airstream Temperatures at Time of Cooling Peak)

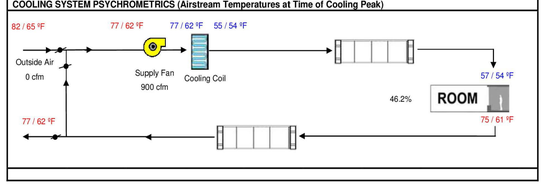

www.apges.com
A Plus Green Energy Services
831.728.7717
408.310.0081

Federally Approved Contractor
Licensed California Contractor
A & B 665195
ICC Building Inspector B1 & B2
8023419
ICC CalGreen Inspector
CalCerts | CHEERS HERS Rater
CABEC Certified Energy Analyst
Build it Green
Certified Green Building Professional
Rater / Advisor

A Plus Green Energy Services
757 Freedom Blvd • Watsonville, CA 95076 • 408.310.0081 • www.apges.com
CERTIFIED HERS RATER / ENERGY ANALYSTS
In tomorrow's California, the sustainability of our environment and the preservation of our beautiful resources will be aided by responsible and professional analysis of our energy needs and uses.
JAMES BLOMQUIST
CEA R22-15-40140
CERTIFIED GreenPoint RATER
CABEC California Association of Building Energy Consultants
CERTIFIED ENERGY PLANS EXAMINER
JAMES G. BLOMQUIST
NR06-10-3719

Energy Compliance

Lauesen Addition & Remodel
290 Pioneer Road
Watsonville, CA 95076

Project id 10562

EN.N

1/26/2026

Lauesen Addition & Remodel

CALIFORNIA MANDATORY GREEN MEASURES

Division 4.5 ENVIRONMENTAL QUALITY CONT.

Description	Sheet
4.504.2.1 Adhesives, sealants and caulks. Adhesives, sealants and caulks used on the project shall meet the requirements of the following standards unless more stringent local or regional air pollution or air quality management district rules apply: **1.** Adhesives, adhesive bonding primers, adhesive primers, sealants, sealant primers, and caulks shall comply with local or regional air pollution control or air quality management district rules where applicable or SCAQMD Rule 1168 VOC limits, as shown in Table 4.504.1 or 4.504.2, as applicable. Such products also shall comply with the Rule 1168 prohibition on the use of certain toxic compounds (chloroform, ethylene dichloride, methylene chloride, perchloroethylene and trichloroethylene), except for aerosol products, as specified in Subsection 2 below. **2.** Aerosol adhesives, and smaller unit sizes of adhesives, and sealant or caulking compounds (in units of product, less packaging, which do not weigh more than 1 pound and do not consist of more than 16 fluid ounces) shall comply with statewide VOC standards and other requirements, including prohibitions on use of certain toxic compounds, of California Code of Regulations, Title 17, commencing with Section 94507.	2
4.504.2.2 Paints and coatings. Architectural paints and coatings shall comply with VOC limits in Table 1 of the ARB Architectural Suggested Control Measure, as shown in Table 4.504.3, unless more stringent local limits apply. The VOC content limit for coatings that do not meet the definitions for the specialty coatings categories listed in Table 4.504.3 shall be determined by classifying the coating as a Flat, Nonflat or Nonflat-high Gloss coating, based on its gloss, as defined in subsections 4.21, 4.36, and 4.37 of the 2007 California Air Resources Board, Suggested Control Measure, and the corresponding Flat, Nonflat or Nonflat- high Gloss VOC limit in Table 4.504.3 shall apply.	2
4.504.2.3 Aerosol paints and coatings. Aerosol paints and coatings shall meet the Product-weighted MIR Limits for ROC in Section 94522(a)(2) and other requirements, including prohibitions on use of certain toxic compounds and ozone depleting substances, in Sections 94522(e)(1) and (f)(1) of California Code of Regulations, Title 17, commencing with Section 94520; and in areas under the jurisdiction of the Bay Area Air Quality Management District additionally comply with the percent VOC by weight of product limits of Regulation 8, Rule 49.	2
4.504.2.4 Verification. Verification of compliance with this section shall be provided at the request of the enforcing agency. Documentation may include, but is not limited to, the following: **1.** Manufacturer's product specification. **2.** Field verification of on-site product containers	2
4.504.3 Carpet systems. Carpet systems. All carpet installed in the building interior shall meet the requirements of the California Department of Public Health, "Standard Method for the Testing and Evaluation of Volatile Organic Chemical Emissions from Indoor Sources Using Environmental Chambers," Version 1.2, January 2017 (Emission testing method for California Specification 01350). See California Department of Public Health's website for certification programs and testing labs. https://www.cdph.ca.gov/Programs/CCDPHP/DEODC/ EHLB/IAQ/Pages/VOC.aspx	2
4.504.3.1 Carpet cushion. Carpet cushion. All carpet cushion installed in the building interior shall meet the requirements of the California Department of Public Health, "Standard Method for the Testing and Evaluation of Volatile Organic Chemical Emissions from Indoor Sources Using Environmental Chambers," Version 1.2, January 2017 (Emission testing method for California Specification 01350). See California Department of Public Health's website for certification programs and testing labs. https://www.cdph.ca.gov/Programs/CCDPHP/DEODC/ EHLB/IAQ/Pages/VOC.aspx	2
4.504.3.2 Carpet adhesive. All carpet adhesive shall meet the requirements of Table 4.504.1.	2
4.504.4 Resilient flooring systems. Where resilient flooring is installed, at least 80 percent of floor area receiving resilient flooring shall meet the requirements of the California Department of Public Health, "Standard Method for the Testing and Evaluation of Volatile Organic Chemical Emissions from Indoor Sources Using Environmental Chambers," Version 1.2, January 2017 (Emission testing method for California Specification 01350). See California Department of Public Health's website for certification programs and testing labs. https://www.cdph.ca.gov/Programs/CCDPHP/DEODC/EHLB/IAQ/Pages/VOC.aspx	2
4.504.5 Composite wood products. Hardwood plywood, particleboard and medium density fiberboard composite wood products used on the interior or exterior of the building shall meet the requirements for formaldehyde as specified in ARB's Air Toxics Control Measure for Composite Wood (17 CCR 93120 et seq.), by or before the dates specified in those sections, as shown in Table 4.504.5.	2
4.504.5.1 Documentation. Verification of compliance with this section shall be provided as requested by the enforcing agency. Documentation shall include at least one of the following: **1.** Product certifications and specifications. **2.** Chain of custody certifications. **3.** Product labeled and invoiced as meeting the Composite Wood Products regulation (see CCR, Title 17, Section 93120, et seq.). **4.** Exterior grade products marked as meeting the PS-1 or PS-2 standards of the Engineered Wood Association, the Australian AS/NZS 2269, European 636 3S, and Canadian CSA O121, CSA O151, CSA O153 and CSA O325 standards. **5.** Other methods acceptable to the enforcing agency.	2
4.505.1 General. Buildings shall meet or exceed the provisions of the California Building Standards Code.	4
4.505.2 Concrete slab foundations. Concrete slab foundations required to have a vapor retarder by the CBC, Chapter 19 or concrete slab-on-ground floors required to have a vapor retarder by the California Residential Code, Chapter 5, shall also comply with this section.	4
4.505.2.1 Capillary break. A capillary break shall be installed in compliance with at least one of the following: **1.** A 4-inch-thick (101.6 mm) base of 1/2 inch (12.7 mm) or larger clean aggregate shall be provided with a vapor retarder in direct contact with concrete and a concrete mix design, which will address bleeding, shrinkage, and curling, shall be used. For additional information, see American Concrete Institute, ACI 302.2R-06. **2.** Other equivalent methods approved by the enforcing agency. **3.** A slab design specified by a licensed design professional.	4
4.505.3 Moisture content of building materials. Building materials with visible signs of water damage shall not be installed. Wall and floor framing shall not be enclosed when the framing members exceed 19-percent moisture content. Moisture content shall be verified in compliance with the following: **1.** Moisture content shall be determined with either a probe-type or contact-type moisture meter. Equivalent moisture verification methods may be approved by the enforcing agency and shall satisfy requirements found in Section 101.8 of this code. **2.** Moisture readings shall be taken at a point 2 feet (610 mm) to 4 feet (1219 mm) from the grade stamped end of each piece to be verified. **3.** At least three random moisture readings shall be performed on wall and floor framing with documentation acceptable to the enforcing agency provided at the time of approval to enclose the wall and floor framing. Insulation products which are visibly wet or have a high moisture content shall be replaced or allowed to dry prior to enclosure in wall or floor cavities. Wet-applied insulation products shall follow the manufacturers' drying recommendations prior to enclosure.	4
4.506.1 Bathroom exhaust fans. Each bathroom shall be mechanically ventilated and shall comply with the following: **1.** Fans shall be ENERGY STAR compliant and be ducted to terminate outside the building. **2.** Unless functioning as a component of a whole house ventilation system, fans must be controlled by a humidity control. **a.** Humidity controls shall be capable of adjustment between a relative humidity range of ≤ 50 percent to a maximum of 80 percent. A humidity control may utilize manual or automatic means of adjustment. **b.** A humidity control may be a separate component to the exhaust fan and is not required to be integral (i.e., built-in). **Notes: 1.** For the purposes of this section, a bathroom is a room which contains a bathtub, shower, or tub/ shower combination. **2.** Lighting integral to bathroom exhaust fans shall comply with the *California Energy Code.*	2
4.507.2 Heating and air-conditioning system design. Heating and air-conditioning systems shall be sized, designed and have their equipment selected using the following methods: **1.**The heat loss and heat gain is established according to ANSI/ACCA 2 Manual J-2016 (Residential Load Calculation), ASHRAE handbooks or other equivalent design software or methods. **2.**Duct systems are sized according to ANSI/ACCA 1 Manual D-2016 (Residential Duct Systems), ASHRAE handbooks or other equivalent design soft-ware or methods. **3.**Select heating and cooling equipment according to ANSI/ACCA 3 Manual S-2014 (Residential Equipment Selection) or other equivalent design software or methods. **Exception:** Use of alternate design temperatures necessary to ensure the systems function are acceptable.	2

Division 4.5 ENVIRONMENTAL QUALITY

Description	Sheet
4.501.1 Scope. The provisions of this chapter shall outline means of reducing the quantity of air contaminants that are odorous, irritating and/or harmful to the comfort and wellbeing of a building's installers, occupants and neighbors.	2
4.503.1 General. Any installed gas fireplace shall be a direct vent sealed-combustion type. Any installed woodstove or pellet stove shall comply with U.S. EPA New Source Performance Standards (NSPS) emission limits as applicable, and shall have a permanent label indicating they are certified to meet the emission limits. Woodstoves, pellet stoves and fireplaces shall also comply with applicable local ordinances.	2
4.504.1 Covering of duct openings and protection of mechanical equipment during construction. At the time of rough installation, during storage on the construction site and until final startup of the heating, cooling and ventilating equipment, all duct and other related air distribution component openings shall be covered with tape, plastic, sheetmetal or other methods acceptable to the enforcing agency to reduce the amount of water, dust and debris, which may enter the system.	2
4.504.2 Finish material pollutant control. Finish materials shall comply with this section.	2

TABLE 4.504.1
ADHESIVE VOC LIMIT[1,2]
Less Water and Less Exempt Compounds in Grams per Liter
1. If an adhesive is used to bond dissimilar substrates together, the adhesive with the highest VOC content shall be allowed.
2. For additional information regarding methods to measure the VOC content specified in this table, see South Coast Air Quality Management District Rule

ARCHITECTURAL APPLICATIONS	CURRENT VOC LIMIT
Indoor carpet adhesives	50
Carpet pad adhesives	50
Outdoor carpet adhesives	150
Wood flooring adhesive	100
Rubber floor adhesives	60
Subfloor adhesives	50
Ceramic tile adhesives	65
VCT and asphalt tile adhesives	50
Drywall and panel adhesives	50
Cove base adhesives	50
Multipurpose construction adhesives	70
Structural glazing adhesives	100
Single-ply roof membrane adhesives	250
Other adhesives not specifically listed	50
SPECIALTY APPLICATIONS	
PVC welding	510
CPVC welding	490
ABS welding	325
Plastic cement welding	250
Adhesive primer for plastic	550
Contact adhesive	80
Special purpose contact adhesive	250
Structural wood member adhesive	140
Top and trim adhesive	250
SUBSTRATE SPECIFIC APPLICATIONS	
Metal to metal	30
Plastic foams	50
Porous material (except wood)	50
Wood	30
Fiberglass	80

TABLE 4.504.5
FORMALDEHYDE LIMITS[1]
Maximum Formaldehyde Emissions in Parts per Million

PRODUCT	CURRENT LIMIT
Hardwood plywood veneer core	0.05
Hardwood plywood composite core	0.05
Particleboard	0.09
Medium density fiberboard	0.11
Thin medium density fiberboard2	0.13

1. Values in this table are derived from those specified by the California Air Resources Board, Air Toxics Control Measure for Composite Wood as tested in accordance with ASTM E1333. For additional information, see California Code of Regulations, Title 17, Sections 93120 through 93120.12.
2. Thin medium density fiberboard has a maximum thickness of 5/16 inch (8 mm).

TABLE 4.504.3
VOC CONTENT LIMITS FOR ARCHITECTURAL COATINGS[2,3]

COATING CATEGORY	EFFECTIVE 1/1/2012
Flat coatings	50
Nonflat coatings	100
Nonflat-high gloss coatings	150
Aluminum roof coatings	400
Basement specialty coatings	400
Bituminous roof coatings	50
Bituminous roof primers	350
Bond breakers	350
Concrete curing compounds	350
Concrete/masonry sealers	100
Driveway sealers	50
Dry fog coatings	150
Faux finishing coatings	350
Fire resistive coatings	350
Floor coatings	100
Form-release compounds	250
Graphic arts coatings (sign paints)	500
High temperature coatings	420
Industrial maintenance coatings	250
Low solids coatings1	120
Magnesite cement coatings	450
Mastic texture coatings	100
Metallic pigmented coatings	500
Multicolor coatings	250
Pretreatment wash primers	420
Primers, sealers, and undercoaters	100
Reactive penetrating sealers	350
Recycled coatings	250
Roof coatings	50
Rust preventative coatings	250
Clear Shellacs	730
Opaque Shellacs	550
Specialty primers, sealers and undercoaters	100
Stains	250
Stone consolidants	450
Swimming pool coatings	340
Traffic marking coatings	100
Tub and tile refinish coatings	420
Waterproofing membranes	250
Wood coatings	275
Wood preservatives	350
Zinc-rich primers	340

1. Grams of VOC per liter of coating, including water and including exempt compounds.
2. The specified limits remain in effect unless revised limits are listed in subsequent columns in the table.
3. Values in this table are derived from those specified by the California Air Resources Board, Architectural Coatings Suggested Control Measure, February 1, 2008. More information is available from the Air Resources Board.

TABLE 4.504.2
SEALANT VOC LIMIT

SEALANTS	CURRENT VOC LIMIT
Architectural	250
Marine deck	760
Nonmembrane roof	300
Roadway	250
Single-ply roof membrane	450
Other	420
SEALANT PRIMERS	
Architectural	
Nonporous	250
Porous	775
Modified bituminous	500
Marine deck	760
Other	750

Division 4.3 – WATER EFFICIENCY & CONSERVATION

Description	Sheet
4.301.1 Scope. The provisions of this chapter shall establish the means of conserving water used indoors, outdoors and in wastewater conveyance.	2
4.303.1 Water conserving plumbing fixtures and fittings. Plumbing fixtures (water closets and urinals) and fittings (faucets and showerheads) shall comply with Sections 4.303.1.1, 4.303.1.2, 4.303.1.3, and 4.303.1.4.**Note:** All noncompliant plumbing fixtures in any residential real property shall be replaced with water -conserving plumbing fixtures. Plumbing fixture replacement is required prior to issuance of a certificate of final completion, certificate of occupancy, or final permit approval by the local building department. See Civil Code Section 1101.1, et seq., for the definition of a noncompliant plumbing fixture, types of residential buildings affected and other important enactment dates.	2
4.303.1.1 Water closets. The effective flush volume of all water closets shall not exceed 1.28 gallons per flush. Tank-type water closets shall be certified to the performance criteria of the U.S. EPA Water Sense Specification for Tank-type Toilets. **Note:** The effective flush volume of dual flush toilets is defined as the composite, average flush volume of two reduced flushes and one full flush.	2
4.303.1.2 Urinals. The effective flush volume of wall mounted urinals shall not exceed 0.125 gallons per flush. The effective flush volume of all other urinals shall not exceed 0.5 gallons per flush.	NA
4.303.1.3.1 Single showerhead. Showerheads shall have a maximum flow rate of not more than 1.8 gallons per minute at 80 psi. Showerheads shall be certified to the performance criteria of the U.S. EPA Water Sense Specification for Showerheads.	2
4.303.1.3.2 Multiple showerheads serving one shower. When a shower is served by more than one showerhead, the combined flow rate of all showerheads and/or other shower outlets controlled by a single valve shall not exceed 1.8 gallons per minute at 80 psi, or the shower shall be designed to allow only one shower outlet to be in operation at a time. **Note**: A hand-held shower shall be considered a showerhead.	2
4.303.1.4.1 Residential lavatory faucets. The maximum flow rate of residential lavatory faucets shall not exceed 1.2 gallons per minute at 60 psi. The minimum flow rate of residential lavatory faucets shall not be less than 0.8 gallons per minute at 20 psi.	2
4.303.1.4.2 Lavatory faucets in common and public use areas. The maximum flow rate of lavatory faucets installed in common and public use areas (outside of dwellings or sleeping units) in residential buildings shall not exceed 0.5 gallons per minute at 60 psi.	2
4.303.1.4.3 Metering faucets. Metering faucets when installed in residential buildings shall not deliver more than 0.2 gallons per cycle.	NA
4.303.1.4.4 Kitchen faucets. The maximum flow rate of kitchen faucets shall not exceed 1.8 gallons per minute at 60 psi. Kitchen faucets may temporarily increase the flow above the maximum rate, but not to exceed 2.2 gallons per minute at 60 psi, and must default to a maximum flow rate of 1.8 gallons per minute at 60 psi. **Note:** Where complying faucets are unavailable, aerators or other means may be used to achieve reduction.	2
4.303.1.4.5 Pre-rinse spray valves. When installed, commercial pre-rinse spray valves shall meet the re-	
4.303.2 Submeters for multifamily buildings and dwelling units in mixed-use residential/commercial buildings. Submeters shall be installed to measure water usage of individual rental dwelling units in accordance with the California Plumbing Code.	2
4.303.3 Standards for plumbing fixtures and fittings. Plumbing fixtures and fittings shall be installed in accordance with the California Plumbing Code, and shall meet the applicable standards referenced in Table 1701.1 of the California Plumbing Code.	2
4.304.1 Outdoor potable water use in landscape areas. Residential developments shall comply with a local water efficient landscape ordinance or the current California Department of Water Resources` Model Water Efficient Landscape Ordinance (MWELO), whichever is more stringent. **Notes:** 1.The Model Water Efficient Landscape Ordinance (MWELO) is located in the California Code of Regulations, Title 23, Chapter 2.7, Division 2.MWELO and supporting documents, including a water budget calculator	1

Division 4.4 – MATERIAL CONSERVATION & RESOURCE EFFICIENCY

Description	Sheet
4.401.1 Scope. The provisions of this chapter shall outline means of achieving material conservation and resource efficiency through protection of buildings from exterior moisture; construction waste diversion; employment of techniques to reduce pollution through recycling of materials; and building commissioning or testing, adjusting and balancing.	GB.1
4.406.1 Rodent proofing. Annular spaces around pipes, electric cables, conduits or other openings in sole/ bottom plates at exterior walls shall be protected against the passage of rodents by closing such openings with cement mortar, concrete masonry or a similar method acceptable to the enforcing agency.	1
4.408.1 Construction waste management. Recycle and/or salvage for reuse a minimum of 65 percent of the nonhazardous construction and demolition waste in accordance with either Section 4.408.2, 4.408.3 or 4.408.4, or meet a more stringent local construction and demolition waste management ordinance. **Exceptions: 1.** Excavated soil and land-clearing debris. **2.** Alternate waste reduction methods developed by working with local agencies if diversion or recycle facilities capable of compliance with this item do not exist or are not located reasonably close to the jobsite. **3.** The enforcing agency may make exceptions to the requirements of this section when isolated jobsites are located in areas beyond the haul boundaries of the diversion facility	GB.1
4.408.2 Construction waste management plan. Submit a construction waste management plan in conformance with Items 1 through 5. The construction waste management plan shall be updated as necessary and shall be available during construction for examination by the enforcing agency. **1.** Identify the construction and demolition waste materials to be diverted from disposal by recycling, reuse on the project or salvage for future use or sale. **2.** Specify if construction and demolition waste materials will be sorted on-site (source-separated) or bulk mixed (single stream). **3.** Identify diversion facilities where the construction and demolition waste material will be taken. **4.** Identify construction methods employed to reduce the amount of construction and demolition waste generated. **5.** Specify that the amount of construction and demolition waste materials diverted shall be calculated by weight or volume, but not by both.	GB.1
4.408.3 Waste management company. Utilize a waste management company, approved by the enforcing agency, which can provide verifiable documentation that the percentage of construction and demolition waste material diverted from the landfill complies with Section 4.408.1. **Note**: The owner or contractor may make the determination if the construction and demolition waste materials will be diverted by a waste management company.	GB.1
4.408.4 Waste stream reduction alternative [LR]. Projects that generate a total combined weight of construction and demolition waste disposed of in landfills, which do not exceed 3.4 pounds per square foot of the building area shall meet the minimum 65 percent construction waste reduction requirement in Section 4.408.1	GB.1
4.408.4.1 Waste stream reduction alternative. Projects that generate a total combined weight of construction and demolition waste disposed of in landfills, which do not exceed 2 pounds per square foot of the building area, shall meet the minimum 65-percent construction waste reduction requirement in Section 4.408.1.	GB.1
4.408.5 Documentation. Documentation shall be provided to the enforcing agency which demonstrates compliance with Section 4.408.2, Items 1 through 5, Section 4.408.3 or Section 4.408.4. **Notes: 1.**Sample forms found in "A Guide to the California Green Building Standards Code (Residential)" located at http:// www.hcd.ca.gov/building-stan-dards/calgreen/cal-green-form.shtml may be used to assist in documenting compliance with this section. **2.**Mixed construction and demolition debris (C&D) processors can be located at the California Department of Resources Recycling and Recovery (CalRecycle).	GB.1
4.410.1 Operation and maintenance manual. At the time of final inspection, a manual, compact disc, web-based reference or other media acceptable to the enforcing agency which includes all of the following shall be placed in the building: **1.** Directions to the owner or occupant that the manual shall remain with the building throughout the life cycle of the structure. **2.** Operation and maintenance instructions for the following: **a.** Equipment and appliances, including water-saving devices and systems, HVAC systems, photovoltaic systems, electric vehicle chargers, water-heating systems and other major appliances and equipment. **b.** Roof and yard drainage, including gutters and downspouts. **c.** Space conditioning systems, including condensers and air filters. **d.** Landscape irrigation systems. **e.** Water reuse systems. **3.** Information from local utility, water and waste recovery providers on methods to further reduce resource consumption, including recycle programs and locations. **4.** Public transportation and/or carpool options available in the area. **5.** Educational material on the positive impacts of an interior relative humidity between 30–60 percent and what methods an occupant may use to maintain the relative humidity level in that range. **6.** Information about water-conserving landscape and irrigation design and controllers which conserve water. **7.** Instructions for maintaining gutters and downspouts and the importance of diverting water at least 5 feet away from the foundation. **8.** Information on required routine maintenance measures, including, but not limited to, caulking, painting, grading around the building, etc. **9.** Information about state solar energy and incentive programs available. **10.** A copy of all special inspection verifications required by the enforcing agency or this code.**11.** Information from the Department of Forestry and Fire Protection on maintenance of defensible space around residential structures. **12.** Information and/or drawings identifying the location of grab bar reinforcements.	At Final
4.410.2 Recycling by occupants. Where 5 or more multifamily dwelling units are constructed on a building site, provide readily accessible area(s) that serves all buildings on the site and are identified for the depositing, storage and collection of nonhazardous materials for recycling, including (at a minimum) paper, corrugated cardboard, glass, plastics, organic waste, and metals, or meet a lawfully enacted local recycling ordinance, if more restrictive. **Exception:** Rural jurisdictions that meet and apply for the exemption in Public Resources Code Section 42649.82 (a)(2)(A) et seq. are not required to comply with the organic waste portion of this section.	NA

Division 4.1 — EV Charging

Description	Sheet
4.106.4.2 New multifamily dwellings, hotels and motels and new residential parking facilities. When parking is provided, parking spaces for new multifamily dwellings, hotels and motels shall meet the requirements of Section 4.106.4.2.2. Calculations for spaces shall be rounded up to the nearest whole number. A parking space served by electric vehicle supply equipment or designed as an EV charging space shall count as at least one standard automobile parking space only for the purpose of complying with any applicable minimum parking space requirements established by a local jurisdiction. See Vehicle Code Section 22511.2 for further details.	NA
4.106.4.2.2 Multifamily dwellings. 1. EV ready parking spaces with receptacles. a. Multifamily parking facilities with assigned parking. Where dwelling units are provided with assigned parking spaces equal to or greater than the number of dwelling units, at least one low power Level 2 EV charging receptacle shall be provided at an assigned parking space for each dwelling unit. 1. Where the total number of dwelling units exceeds the number of assigned parking spaces, all assigned parking spaces shall be provided with one low power Level 2 EV charging receptacle. **Exception**: Areas of parking facilities served by parking lifts, including but not limited to, automated mechanical-access open parking garages as defined in the California Building Code; or parking facilities otherwise incapable of supporting electric vehicle charging. **b. Multifamily parking facilities with unassigned parking**. Where dwelling units are provided with unassigned parking spaces equal to or greater than the number of dwelling units, at least one low power Level 2 EV charging receptacle shall be provided at an unassigned parking space for each dwelling unit. **1.** Where the total number of dwelling units exceeds the number of unassigned parking spaces, all unassigned parking spaces shall be provided with one low power Level 2 EV charging receptacle. **Exception**: Areas of parking facilities served by parking lifts, including but not limited to, automated mechanical-access open parking garages as defined in the California Building Code; or parking facilities otherwise incapable of supporting electric vehicle charging. **c. Multifamily parking facilities with assigned and unassigned parking**. Where multifamily buildings are provided with both assigned and unassigned parking spaces equal to or greater than the number of dwelling units, at least one low power Level 2 EV charging receptacle shall be provided for each dwelling unit at either the assigned or unassigned parking space, but not both. **d. Receptacle power source**. EV charging receptacles in multifamily parking facilities at assigned parking spaces shall be provided with a dedicated branch circuit connected to the dwelling unit's electrical panel, unless determined as infeasible by the project builder or designer and subject to concurrence of the local enforcing agency. **Exception**: Areas of parking facilities served by parking lifts, including but not limited to, automated mechanical-access open parking garages as defined in the California Building Code; or parking facilities otherwise incapable of supporting electric vehicle charging. **e. Receptacle configurations**. 208/240V EV charging receptacles shall comply with one of the following configurations: 1. For 20-ampere receptacles, NEMA 6-20R 2. For 30-ampere receptacles, NEMA 14-30R 3. For 50-ampere receptacles, NEMA 14-50R **2. EV ready parking spaces with EV chargers**. **a. Multifamily parking facilities with unassigned or common use parking**. In addition to the low power Level 2 EV charging receptacle requirements of Section 4.106.4.2.2 (1), twenty-five (25) percent of unassigned or common use parking spaces not already provided with low power Level 2 EV charging receptacles, pursuant to Section 4.106.4.2.2 (1), shall be equipped with Level 2 EV chargers and shall be made available for use by all residents or guests. **b. Ev charger connectors**. EV chargers shall be equipped with J1772 or J3400 connectors. **c. An automatic load management system** (ALMS) may be used to reduce the maximum required electrical capacity to each space served by the ALMS. The electrical system and any on-site distribution transformers shall have sufficient capacity to deliver at least 3.3 kW simultaneously to each EV charging station (EVCS) served by the ALMS. The branch circuit shall have a minimum capacity of 40 amperes, and installed EV chargers shall have a capacity of not less than 30 amperes.	n/a
4.106.4.2.2.1 Electric vehicle charging stations (EVCS). Electric vehicle charging stations required by Section 4.106.4.2.2, Item 2, with EV chargers installed shall comply with Section 4.106.4.2.2.1.1. **Exception:** Electric vehicle charging stations serving public accommodations, public housing, motels, and hotels shall not be required to comply with this section. See California Building Code, Chapter 11B, for applicable requirements.	n/a
4.106.4.2.2.1.1 Electric vehicle charging stations (EVCS) spaces with EV chargers installed; dimensions and location. EVCS spaces shall be designed to comply with the following: **1.** The minimum length of each EVCS space shall be 18 feet (5486 mm). **2.** The minimum width of each EVCS space shall be 9 feet (2743 mm). **3.** One in every 25 EVCS spaces, but not less than one, shall also have an 8-foot (2438 mm) wide minimum aisle. A 5-foot (1524 mm) wide minimum aisle shall be permitted provided the minimum width of the EVCS space is 12 feet (3658 mm). Surface slope for this EVCS space and the aisle shall not exceed 1 unit vertical in 48 units horizontal (2.083 percent slope) in any direction. These EVCS spaces shall also comply with at least one of the following: **a.** The EVCS space shall be located adjacent to an accessible parking space meeting the requirements of the California Building Code, Chapter 11A, to allow use of the EV charger from the accessible parking space. **b.** The EVCS space shall be located on an accessible route, as defined in the California Building Code, Chapter 2, to the building. **Exception:** Electric vehicle charging stations designed and constructed in compliance with the California Building Code, Chapter 11B, are not required to comply with Section	n/a
4.106.4.2.2.1.2 Accessible electric vehicle charging station spaces. In addition to the requirements in Section 4.106.4.2.2.1.1, all EV chargers, where installed, shall comply with the accessibility provisions for EV chargers in the *California Building Code*, Chapter 11B. EV ready spaces and EVCS in multifamily developments shall comply with *California Building Code*, Chapter 11A, Section 1109A.	n/a
4.106.4.2.5 Electric vehicle ready space signage. Electric vehicle ready spaces shall be identified by signage or pavement markings, in compliance with Caltrans Traffic Operations Policy Directive 13-01 (Zero Emission Vehicle Signs and Pavement Markings) or its successor(s).	
4.106.4.3 Electric vehicle charging for additions and alterations of parking facilities serving existing multifamily buildings, hotels and motels. When existing parking facilities are altered or new parking spaces are added to existing parking facilities, and the work requires a building permit, each parking space added or altered shall have access to either a low power Level 2 EV charging receptacle or Level 2 EV charger, unless determined as infeasible by the project builder or designer and subject to concurrence of the local enforcing agency. **Exception:** Where work requiring a permit is being performed for the installation of 120-volt electrical receptacle(s) for level 1 EV charging.	NA
4.106.4.4. Bicycle parking. Bicycle parking shall comply with Sections 4.106.4.4.1 through 4.106.4.4.3.	NA
4.106.4.4.1 Short-term bicycle parking for multifamily buildings, hotels and motels. Provide on-site bicycle parking at a ratio of one parking space for every 10,000 square feet, but not less than two spaces. Short-term bicycle parking shall be located within 200 feet of building entrances, and readily visible to passers-by. Acceptable parking facilities shall be conveniently accessed from the street and may include, but not be limited to: **1.** Permanently anchored bicycle parking devices, racks, or lockers in an unsheltered, open area. **2.** Covered or uncovered enclosures with permanently anchored bicycle parking devices or racks.	NA
4.106.4.4.2 Long-term bicycle parking for multifamily buildings. Provide on-site bicycle parking at a ratio of one parking space for every two dwelling units. Acceptable parking facilities shall be conveniently accessed from the street and may include, but not be limited to: **1.** Covered, lockable enclosures with permanently anchored bicycle parking devices or racks. **2.** Lockable bicycle storage rooms with permanently anchored bicycle parking devices or racks. **3.** Lockable, weatherproof, permanently anchored bicycle lockers.	NA

Division 3 General

Description	Sheet
301.1 SCOPE. Buildings shall be designed to include the green building measures specified as mandatory in the application checklists contained in this code. Voluntary green building measures are also included in the application checklists and may be included in the design and construction of structures covered by this code, but are not required unless adopted by a city, county, or city and county as specified in Section 101.7.	1
301.1.1 Additions and alterations. [HCD] The mandatory provisions of Chapter 4 shall be applied to additions or alterations of existing residential buildings where the addition or alteration increases the building's conditioned area, volume, or size. The requirements shall apply only to and/or within the specific area of the addition or alteration. The mandatory provision of Section 4.106.4.2 may apply to additions or alterations of existing parking facilities or the addition of new parking facilities serving existing multifamily buildings. See Section 4.106.4.3 for application. **Note:** Repairs including, but not limited to, resurfacing, restriping and repairing or maintaining existing lighting fixtures are not considered alterations for the purpose of this section.	1
301.2 LOW-RISE AND HIGH-RISE RESIDENTIAL BUILDINGS. [HCD] The provisions of individual sections of CALGreen may apply to either low-rise residential buildings high-rise residential buildings, or both. Individual sections will be designated by banners to indicate where the section applies specifically to low-rise only (LR) or high-rise only (HR). When the section applies to both low-rise and high-rise buildings, no banner will be used.	1
SECTION 302 MIXED OCCUPANCY BUILDINGS 302.1 MIXED OCCUPANCY BUILDINGS. In mixed occupancy buildings, each portion of a building shall comply with the specific green building measures applicable to each specific occupancy. Exceptions: 1. [HCD] Accessory structures and accessory occupancies serving residential buildings shall comply with Chapter 4 and Appendix A4, as applicable. 2. [HCD] For purposes of *CAL*Green, live/work units, complying with Section 508.5 of the *California Building Code*, shall not be considered mixed occupancies. Live/Work units shall comply with Chapter 4 and Appendix A4, as applicable.	n/a

Division 4.1 — Site & EV Charging

Description	Sheet
4.101.1 Scope. The provisions of this division outline planning, design and development methods that include environmentally responsible site selection, building design, building siting and development to protect, restore and enhance the environmental quality of the site and respect the integrity of adjacent properties.	1
4.106.1 General. Preservation and use of available natural resources shall be accomplished through evaluation and careful planning to minimize negative effects on the site and adjacent areas. Preservation of slopes, management of storm water drainage and erosion controls shall comply with this section.	1
4.106.2 Storm water drainage and retention during construction. Projects which disturb less than one acre of soil and are not part of a larger common plan of development which in total disturbs one acre or more, shall manage storm water drainage during construction. In order to manage storm water drainage during construction, one or more of the following measures shall be implemented to prevent flooding of adjacent property, prevent erosion and retain soil runoff on the site. **1.**Retention basins of sufficient size shall be utilized to retain storm water on the site. **2.**Where storm water is conveyed to a public drainage system, collection point, gutter or similar disposal method, water shall be filtered by use of a barrier system, wattle or other method approved by the enforcing agency. **3.**Compliance with a lawfully enacted storm water management ordinance. **Note:** Refer to the State Water Resources Control Board for projects which disturb one acre or more of soil, or are part of a larger common plan of development which in total disturbs one acre or more of soil.(Website: https:// www.waterboards.ca.gov/water_issues/programs/stormwater/construction.html)	1
4.106.3 Grading and paving. Construction plans shall indicate how the site grading or drainage system will manage all surface water flows to keep water from entering buildings. Examples of methods to manage surface water include, but are not limited to, the following: **1**. Swales **2.** Water collection and disposal systems **3.** French drains **4.** Water retention gardens **5.** Other water measures which keep surface water away from buildings and aid in groundwater recharge. **Exception:** Additions and alterations not altering the drainage path.	1
4.106.4 Electric vehicle (EV) charging for new construction. New construction shall comply with Section 4.106.4.1 or 4.106.4.2.Electric vehicle supply equipment (EVSE) shall comply with the California Electrical Code. **Exceptions**: **1.** On a case-by-case basis, where the local enforcing agency has determined EV charging and infrastructure are not feasible based upon one or more of the following conditions: **1.1.** Where there is no local utility power supply or the local utility is unable to supply adequate power.**1.2.** Where there is evidence suitable to the local enforcing agency substantiating that additional local utility infra-structure design requirements, directly related to the implementation of Section 4.106.4, may adversely impact the construction cost of the project. **2.** Accessory Dwelling Units (ADU) and Junior Accessory Dwelling Units (JADU) without additional parking facilities.	n/a
4.106.4.1 New one- and two-family dwellings and townhouses with attached private garages. For each dwelling unit, install a listed raceway to accommodate a dedicated 208/240-volt branch circuit. The raceway shall not be less than trade size 1 (nominal 1-inch inside diameter). The raceway shall originate at the main service or subpanel and shall terminate into a listed cabinet, box or other enclosure in close proximity to the proposed location of an EV charger. Raceways are required to be continuous at enclosed, inaccessible or concealed areas and spaces. The service panel and/or subpanel shall provide capacity to install a 40-ampere 208/240-volt minimum dedicated branch circuit and space(s) reserved to permit installation of a branch circuit overcurrent protective device. **Exception:** A raceway is not required if a minimum 40-ampere 208/240-volt dedicated EV branch circuit is installed in close proximity to the proposed location of an EV charger at the time of original construction in accordance with the California Electrical Code.	n/a
4.106.4.1.1 Identification. The service panel or subpanel circuit directory shall identify the overcurrent protective device space(s) reserved for future EV charging as "EV CAPABLE". The raceway termination location shall be permanently and visibly marked as "EV CAPABLE".	n/a
ABBREVIATION DEFINITIONS: HCD Department of Housing and Community Development BSC California Building Standards Commission DSA-SS Division of the State Architect, Structural Safety OSHPD Office of Statewide Health Planning and Development LR Low Rise HR High Rise AA Additions	

INSTALLER AND SPECIAL INSPECTOR QUALIFICATIONS

702.1 Installer training. HVAC system installers shall be trained and certified in the proper installation of HVAC systems including ducts and equipment by a nationally or regionally recognized training or certification program. Uncertified persons may perform HVAC installations when under the direct supervision and responsibility of a person trained and certified to install HVAC systems or contractor licensed to install HVAC systems. Examples of acceptable HVAC training and certification programs include but are not limited to the following: **1.** State certified apprenticeship programs. **2.** Public utility training programs. **3.** Training programs sponsored by trade, labor or statewide energy consulting or verification organizations. **4.** Programs sponsored by manufacturing organizations. **5.** Other programs acceptable to the enforcing agency.

702.2 Special inspection. [HCD] When required by the enforcing agency, the owner or the responsible entity acting as the owner's agent shall employ one or more special inspectors to provide inspection or other duties necessary to substantiate compliance with this code. Special inspectors shall demonstrate competence to the satisfaction of the enforcing agency for the particular type of inspection or task to be performed. In addition to other certifications or qualifications acceptable to the enforcing agency, the following certifications or education may be considered by the enforcing agency when evaluating the qualifications of a special inspector: **1.** Certification by a national or regional green building program or standard publisher. **2.** Certification by a statewide energy consulting or verification organization, building performance contractors, and home energy auditors. **3.** Successful completion of a third party apprentice training program in the appropriate trade. **4.** Other programs acceptable to the enforcing agency. **Notes: 1.** Special inspectors shall be independent entities with no financial interest in the materials or the project they are inspecting for compliance with this code.

[BSC-CG] When required by the enforcing agency, the owner or the responsible entity acting as the owner's agent shall employ one or more special inspectors to provide inspection or other duties necessary to substantiate compliance with this code. Special inspectors shall demonstrate competence to the satisfaction of the enforcing agency for the particular type of inspection or task to be performed. In addition, the special inspector shall have a certification from a recognized state, national or international association, as determined by the local agency. The area of certification shall be closely related to the primary job function, as determined by the local agency. **Note:** Special inspectors shall be independent entities with no financial interest in the materials or the project they are inspecting for compliance with this code.

703.1 Documentation. Documentation used to show compliance with this code shall include but is not limited to, construction documents, plans, specifications, builder or installer certification, inspection reports, or other methods acceptable to the enforcing agency which demonstrate substantial conformance. When specific documentation or special inspection is necessary to verify compliance, that method of compliance will be specified in the appropriate section or identified in the application checklist.

www.apges.com

A Plus Green Energy Services
831.728.7717
408.310.0081

Federally Approved Contractor

Licensed California Contractor
A & B 665195

ICC Building Inspector B1 & B2
8023419

ICC CalGreen Inspector

CalCerts | CHEERS HERS Rater

CABEC Certified Energy Analyst

Build it Green
Certified Green Building Professional
Rater / Advisor

A Plus Green Energy Services
757 Freedom Blvd ▪ Watsonville, CA 95076 ▪ 408-310-0081 ▪ www.apges.com

CERTIFIED HERS RATER / ENERGY ANALYSTS
In tomorrow's California, the sustainability of our environment and the preservation of our beautiful resources will be aided by responsible and professional analysis of our energy needs and uses.

JAMES BLOMQUIST
CEA R22-15-40140

Title 24 Part 11
2025 CalGreen Code

CalGreen Mandatory

Lauesen Addition & Remodel
290 Pioneer Road
Watsonville, CA 95076

Project id 10562

GB.1

1/26/2026

County of Santa Cruz
Community Development & Infrastructure

Special Inspections | Form PLG-240 | 1 of 8 | Rev 09/26/25

PLG-240 must be on the plan sheets. Documents cannot be restricted by digital signatures or otherwise.

A. Statement of Special Inspections

Permit No.
APN: 109-261-07
Project Address: 290 Pioneer Road Watsonville, CA 95076

Reserved for County Stamp

Form Submittal
The Owner or Owner's Agent, on the advice of the Registered Design Professional in Responsible Charge, must complete this form, secure signatures by ***all parties***, and incorporate *all pages onto the plan sheets.*

2022 California Building Code (CBC) This form lists aspects of the project that require special inspection and testing as indicated in the California Building Code Section 1704 and 1705 and defines duties and responsibilities of parties involved in the project.

Duties & Responsibilities. The Owner and Contractor acknowledge assignment of the following duties, responsibilities, and conditions applicable to special inspection or testing:

Owner
1. Ensures that construction complies with the approved permit documents and implements the program of special inspections.

Contractor
1. Ensures proper notification to the special inspection or testing agency for items listed herein.
2. Reviews the Building Division approved permit documents for additional inspection or testing requirements. A pre-construction conference at the job site is recommended to review special inspection procedures.

Special Inspection/Testing Agency
1. Provides copies of all laboratory reports and inspections to the Building Division and Registered Design Professional in Responsible Charge on a weekly basis. Only the testing laboratory may take samples and transport them to their laboratory.
2. Submits for the Building Division's approval an Inspector List that shows the names and qualifications of on-site special inspectors who are NOT on the County's pre-approved list.
3. Provides each special inspector with an identification badge that includes:
   → Name and photograph
   → Areas that the inspector is qualified to inspect
   → An authorization signature by the Registered Engineer who is a full-time employee of the agency
4. Provides the Final Report of Special Inspections that documents required special inspections and correction of discrepancies noted in inspections. A copy of this report must be kept at the job site for review by the County Inspector prior to final inspections.
   Per CBC section 1704.2.4 this report is required before an occupancy permit can be issued

Special Inspectors
1. Must have their badge visible when performing their duties.
2. Must immediately notify the County Building Division upon encountering any concerns or problems.
3. Must use only the County Building Division's approved permit documents.

Acknowledgements Provide name, signature & date

Registered Design Professional in Responsible Charge
Name: Tim Wann C.E. 62913 Signature: Tim Wann Date: 01/21/26

Owners' Authorization
Name: Chris & Kelli Lauesen Signature: Chris Lauesen

Contractor
Name: Willis Bailey, Jr. Signature: WB 01/21/26 Date:

County of Santa Cruz
Community Development & Infrastructure

Special Inspections | Form PLG-240 | 2 of 8 | Rev 09/26/25

B. Special Inspection Agency, Material Testing Lab, Geotechnical

Firm Name: Advanced Testing and Inspections
Person Name: 540 Brunken Ave. Suite B Salinas, Ca. 93901
Phone: 831-422-2272
Email: office@ati-corp.com
Responsibility: Retrofit anchors in hardened concrete, Wood framed shearwalls with nailing 4" o.c. or less

Firm Name:
Person Name:
Phone:
Email:
Responsibility:

Firm Name:
Person Name:
Phone:
Email:
Responsibility:

C. Contractor's Statement of Responsibility – CBC 1704.4

CBC Section 1704.4 requires the Contractor responsible for the construction of a main wind or seismic force resisting system, designated seismic system, or a wind or seismic resisting components to submit a written statement of responsibility to the Building Official and the Owner prior to the commencement of work on the system or component. **The Contractor hereby acknowledges this responsibility regarding special requirements as described in the Summary of Special Inspections & Tests, Inspection Schedule, issued documentation and as prepared by the engineer of record or registered design professional and the requirements of CBC 1704.3.**

Acknowledgement
Contractor License No. 1124416
Name: WILLIS BAILEY Signature: WB Date: 1/21/26

Special Inspections and Testing will be performed in accordance with the approved plans and specifications, this statement and CBC Sections 1704 and 1705. The Summary of Special Inspections & Tests summarizes the Special Inspections and tests required. Special Inspectors will refer to the approved plans and specifications for detailed special inspection requirements. Any additional tests and inspections required by the approved plans and specifications will also be performed.

Seismic Requirements – CBC 1704.3.2
The extent of the seismic-force-resisting system is defined in more detail in the construction documents.
Describe seismic-force-resisting system and designated seismic systems subject to special inspections per Section 1705.13:
Shearwall nailing,bolting,anchoring of wood framed shearwalls with boundary nailing 4" o.c. or less

Wind Requirements – CBC 1704.3.3
The extent of the main wind-force-resisting system and wind resisting components is defined in more detail in the construction
Describe wind-force-resisting system & designated wind resisting components subject to special inspections per Section 1705.12:
Shearwall nailing,bolting,anchoring of wood framed shearwalls with boundary nailing 4" o.c. or less

County of Santa Cruz
Community Development & Infrastructure

Special Inspections | Form PLG-240 | 5 of 8 | Rev 09/26/25

D. Summary Of Special Inspections & Tests

Identify special inspections/tests required by CBC chapter 17 for this project.
Additional detail regarding inspections and tests is provided in the project specifications or notes on the drawings.
*Describe and mark each required inspection/test as **Continuous (C)** or **Periodic (P)** or **both** as appropriate.*

Inspection/Test Categories	Inspection/Test Descriptions	C	P
Seismic Resistance 1705.13	Shearwall nailing,bolting,anchoring of wood framed shearwalls with boundary nailing 4" o.c. or less	☐	☒
		☐	☐
Testing for Seismic Resistance 1705.14		☐	☐
Sprayed Fire-Resistant Materials 1705.15		☐	☐
Mastic & Intumescent Coatings 1705.16		☐	☐
Exterior Insulation & Finish Systems (EIFS) 1705.17		☐	☐
Fire-Resistant Penetrations & Joints 1705.18		☐	☐
Smoke Control Systems 1705.19		☐	☐
Sealing of Mass Timber 1705.20		☐	☐
Other tests, inspections, or special instructions		☐	☐

County of Santa Cruz
Community Development & Infrastructure

Special Inspections | Form PLG-240 | 4 of 8 | Rev 09/26/25

D. Summary Of Special Inspections & Tests

Identify special inspections/tests required by CBC chapter 17 for this project.
Additional detail regarding inspections and tests is provided in the project specifications or notes on the drawings.
*Describe and mark each required inspection/test as **Continuous (C)** or **Periodic (P)** or **both** as appropriate.*

Inspection/Test Categories	Inspection/Test Descriptions	C	P
Wood 1705.5	Shearwall nailing,bolting,anchoring of wood framed shearwalls with boundary nailing 4" o.c. or less	☐	☒
		☐	☐
		☐	☐
Soils 1705.6		☐	☐
		☐	☐
Driven Deep Foundation Elements 1705.7		☐	☐
Cast-in-Place Deep Foundation Elements 1705.8		☐	☐
Helical Pile Foundations 1705.9		☐	☐
		☐	☐
Wind Resistance 1705.12		☐	☐
		☐	☐

County of Santa Cruz
Community Development & Infrastructure

Special Inspections | Form PLG-240 | 3 of 8 | Rev 09/26/25

D. Summary Of Special Inspections & Tests

Identify special inspections/tests required by CBC chapter 17 for this project.
Additional detail regarding inspections and tests is provided in the project specifications or notes on the drawings.
*Describe and mark each required inspection/test as **Continuous (C)** or **Periodic (P)** or **both** as appropriate.*

Inspection/Test Categories	Inspection/Test Descriptions	C	P
Special Cases 1705.1.1		☐	☐
Structural Steel 1705.2.1		☐	☐
		☐	☐
Cold-Formed Steel Deck 1705.2.2		☐	☐
Open-Web Steel Joists & Joist Girders 1705.2.3		☐	☐
Cold-Formed Steel Trusses Span ≥ 60 feet 1705.2.4		☐	☐
Concrete 1705.3	Retrofit anchors post installed in hardened concrete	☒	☐
		☐	☐
		☐	☐
Masonry 1705 Level 1 TMS 602 Table 3, Level 2 or 3 TMS 602 Tables 3, 4		☐	☐

County of Santa Cruz
Community Development & Infrastructure

Special Inspections | Form PLG-240 | 6 of 8 | Rev 09/26/25

E. Special Inspection & Testing Agencies Recognized by Santa Cruz County Building Division

Agencies may have more than one location. "Pending" agencies are recognized. Other agencies require prior approval.

***RC** = Reinforced Concrete* · ***SW** = Steel Welding* · ***NDT** = Non-destructive Testing*
***PC** = Prestressed Concrete* · ***HSB** = High-Strength Bolting* · ***FP** = Fireproofing*
***SM** = Structural Masonry* · ***SWC** = Structural Wood Construction*

Agency	RC	PC	SM	SW	HSB	NDT	SWC	FP	Expires
ACE Quality Control San Leandro, CA (916) | 742-5096	RC	PC	SM	SW	HSB			FP	Pending
Achievement Engineering Corp. San Jose, CA | (408) 217-9174	RC	PC	SM	SW	HSB	NDT	SWC	FP	8/28
Advanced Testing & Inspection (ATI) Salinas, CA | (831) 422-2272	RC	PC	SM	SW	HSB			FP	Pending
Apex Testing Labs, Inc. San Francisco, CA | (415) 550-9800	RC	PC	SM	SW	HSB	NDT		FP	Pending
Applied Materials & Engineering Oakland, CA | (510) 420-8190	RC	PC	SM	SW	HSB	NDT	SWC	FP	Pending
Aries Engineering San Jose, CA | (408)634-0087	RC			SW	HSB		SWC		10/26
Baez Geotechnical Group (BGG) Livermore, CA | (925) 766-1616	RC	PC	SM						4/22
BAGG Engineers San Jose, CA | (650) 852-9133	RC	PC	SM	SW	HSB	NDT		FP	10/26
Berlogar, Stevens and Associates Pleasanton, CA | (925) 484-0220	RC	PC	SM	SW	HSB			FP	6/27
Biggs Cardosa Associates, Inc. San Jose, CA | (408) 296-5515	RC	PC	SM	SW	HSB				3/27
B.S.K. Associates Livermore, CA | (925) 315-3151	RC	PC	SM	SW	HSB	NDT		FP	5/25
Consolidated Engineering Labs San Ramon, CA | (925) 314-7100	RC	PC	SM	SW	HSB	NDT	SWC	FP	Pending
Construction Testing Services (CTS) Pleasanton, CA | (925) 462-5183	RC	PC	SM	SW	HSB	NDT	SWC	FP	3/26
CTE Cal, Inc. Fremont, CA | (510) 573-6362	RC	PC	SM	SW	HSB	NDT	SWC	FP	12/25
Earth Systems Pacific Fremont, CA | (510) 353-3833	RC	PC	SM	SW	HSB	NDT	SWC	FP	3/27
ENGEO Incorporated San Ramon, CA | (925) 866-9000	RC	PC	SM	SW	HSB	NDT	SWC	FP	4/27
Geissler Engineering Belvedere, CA | (415) 992-9393	RC			SW	HSB		SWC		10/23
Generalist Building Inspections Inc Pittsburg, CA | (562) 446-3318	RC	PC	SM	SW	HSB	NDT	SWC	FP	Pending

County of Santa Cruz
Community Development & Infrastructure

Special Inspections | Form PLG-240 | 7 of 8 | Rev 09/26/25

E. Special Inspection & Testing Agencies Recognized by Santa Cruz County Building Division

Agencies may have more than one location. "Pending" agencies are recognized. Other agencies require prior approval.

***RC** = Reinforced Concrete* · ***SW** = Steel Welding* · ***NDT** = Non-destructive Testing*
***PC** = Prestressed Concrete* · ***HSB** = High-Strength Bolting* · ***FP** = Fireproofing*
***SM** = Structural Masonry* · ***SWC** = Structural Wood Construction*

Agency	RC	PC	SM	SW	HSB	NDT	SWC	FP	Expires
Geocon Consultants, Inc. Livermore, CA | (925) 371-5900	RC	PC	SM	SW	HSB		SWC	FP	Pending
HP Inspections San Jose, CA | (408) 288-8460	RC	PC	SM	SW	HSB	NDT		FP	Pending
Inspection Services Inc. (ISI) Esparto, CA | (707) 974-0541	RC	PC	SM	SW	HSB	NDT	SWC	FP	2/26
Integrity Inspections Berkeley, CA | (510) 900-2100			SM	SW	HSB	NDT		FP	3/28
KC Engineering Co. Vacaville, CA | (707) 447-4025	RC	PC	SM	SW	HSB			FP	1/28
Kleinfelder Inc. Hayward, CA | (925) 484-1700	RC	PC	SM	SW	HSB	NDT		FP	4/28
Korbmacher Engineering Inc. Livermore, CA | (925) 454-9033	RC	PC	SM	SW	HSB	NDT	SWC	FP	Pending
Krazan and Associates Inc. Pleasanton, CA | (925) 307-1160	RC	PC	SM	SW	HSB	NDT	SWC	FP	Pending
Material Engineering Inspection San Jose, CA | (408) 844-3775	RC	PC	SM	SW	HSB	NDT	SWC	FP	Pending
MatriScope Engineering Laboratories, Inc Livermore, CA | (510) 763-3601	RC	PC	SM	SW	HSB	NDT	SWC	FP	Pending
Mid Pacific Engineering, Inc MPE Sacramento, CA | (916) 927-7000	RC	PC	SM	SW	HSB	NDT		FP	6/26
Nicholas Engineering Consultants Dublin, CA | (925) 829-8090	RC	PC	SM	SW	HSB		SWC	FP	5/26
Ninyo & Moore San Jose, CA | (408) 435-9000	RC	PC	SM	SW	HSB	NDT	SWC	FP	3/28
Norcon, LLC San Francisco, CA | (415) 692-0519	RC	PC	SM	SW	HSB	NDT	SWC	FP	10/26
Picot Inspection Oakland, CA | (510) 847-8990	RC	PC	SM	SW	HSB		SWC	FP	1/27
PJC & Associates, Inc. Rohnert Park, CA | (707) 584-4804	RC	PC	SM	SW	HSB			FP	1/27
Intertek-PSI Inc. Morgan Hill, CA | (408) 669-5500	RC		SM	SW	HSB			FP	Pending
Quantum Geotechnical San Jose, CA | (408) 629-3822	RC	PC	SM					FP	Pending

County of Santa Cruz
Community Development & Infrastructure

Special Inspections | Form PLG-240 | 8 of 8 | Rev 09/26/25

E. Special Inspection & Testing Agencies Recognized by Santa Cruz County Building Division

Agencies may have more than one location. "Pending" agencies are recognized. Other agencies require prior approval.

***RC** = Reinforced Concrete* · ***SW** = Steel Welding* · ***NDT** = Non-destructive Testing*
***PC** = Prestressed Concrete* · ***HSB** = High-Strength Bolting* · ***FP** = Fireproofing*
***SM** = Structural Masonry* · ***SWC** = Structural Wood Construction*

Agency	RC	PC	SM	SW	HSB	NDT	SWC	FP	Expires
RES Engineers, Inc. San Francisco, CA | (415) 822-4625	RC	PC	SM	SW	HSB	NDT	SWC	FP	8/26
RMA Group Rancho Cordova, CA | (916) 631-7194	RC	PC	SM	SW	HSB	NDT	SWC	FP	7/26
Salem Engineering Group, Inc. Fresno, CA | (559) 271-9700	RC	PC	SM	SW	HSB	NDT		FP	8/25
Sigma Engineering Laboratories, Inc. San Francisco, CA | (415) 702-8374	RC	PC	SM	SW	HSB	NDT		FP	1/28
Signet Testing Laboratories Hayward, CA | (510) 887-8484	RC	PC	SM	SW	HSB	NDT	SWC	FP	1/28
Smith-Emery Company San Francisco, CA | (415) 642-7326	RC	PC	SM	SW	HSB	NDT	SWC	FP	8/26
Stevens Ferrone & Bailey Concord, CA | (925) 688-1001	RC	PC	SM	SW	HSB		SWC	FP	7/26
Structure Groups Livermore, CA | (925) 447-9900	RC	PC	SM	SW	HSB		SWC	FP	7/26
Terracon Consultants, Inc Concord, CA | (925) 348-9057	RC	PC	SM	SW	HSB	NDT	SWC	FP	4/27
Testing Engineers Inc. San Leandro, CA | (510) 835-3142	RC	PC	SM	SW	HSB	NDT	SWC	FP	2/28
Twining Sacramento, CA | (916) 649-9000	RC	PC	SM	SW	HSB	NDT	SWC	FP	2/24
Valley Inspection Vallejo, CA | (707) 552-7037				SW			SWC	FP	6/25
Wallace-Kuhl & Associates, Inc. Sacramento, CA | (916) 372-1434	RC	PC	SM	SW	HSB	NDT		FP	Pending
Youngdahl Consulting Group Inc. El Dorado Hills, CA | (916) 933-0633	RC	PC	SM	SW	HSB	NDT	SWC	FP	Pending

REVISIONS	BY

ROBIN ALAGA
250 Evening Hill Lane Corralitos, CA 95076
Phone: (831)724-4994 Cell: (831)419-4919
e-mail: alagainc@gmail.com

LAUESEN ADDITION & REMODEL
Chris & Kelli Lauesen 831.588.8230 lauesenc@gmail.com
290 Pioneer Road Watsonville, CA 95076

Robin Alaga

DRAWN
CHECKED
DATE
SCALE
JOB NO.
SHEET
SI
OF SHEETS